REGINA

FliteTop®

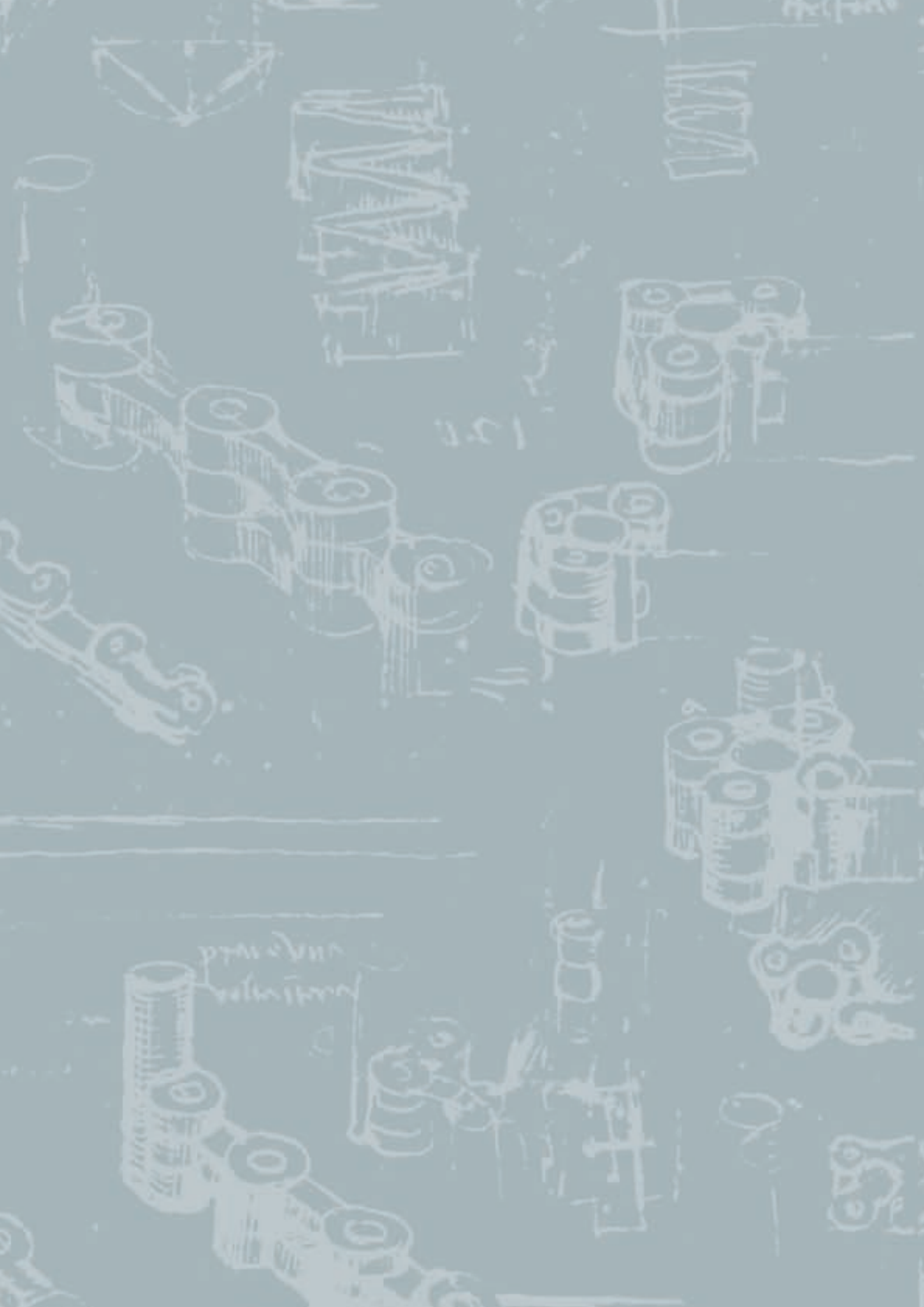

FliteTop®
Steel Chains

FliteTop®

CARBON STEEL CHAINS

APPLICATIONS (only dry running):

- Glass manufacturing
- Automotive /mechanical
- General purpose conveyors
- Heavy loads and abrasive surfaces

STAINLESS STEEL CHAINS

APPLICATIONS:

- New glass bottle
- Returnable glass bottle
- Glass manufacturing
- Keg line
- Crate conveyors
- General purpose conveying

BENEFITS:

- Very good flatness and surface finish
- High wear resistance (special alloys)
- Reduced transversal and longitudinal gaps (Prima chains)
- For stainless steel chains: austenitic stainless steel pins guarantee high wear resistance for less chain elongation

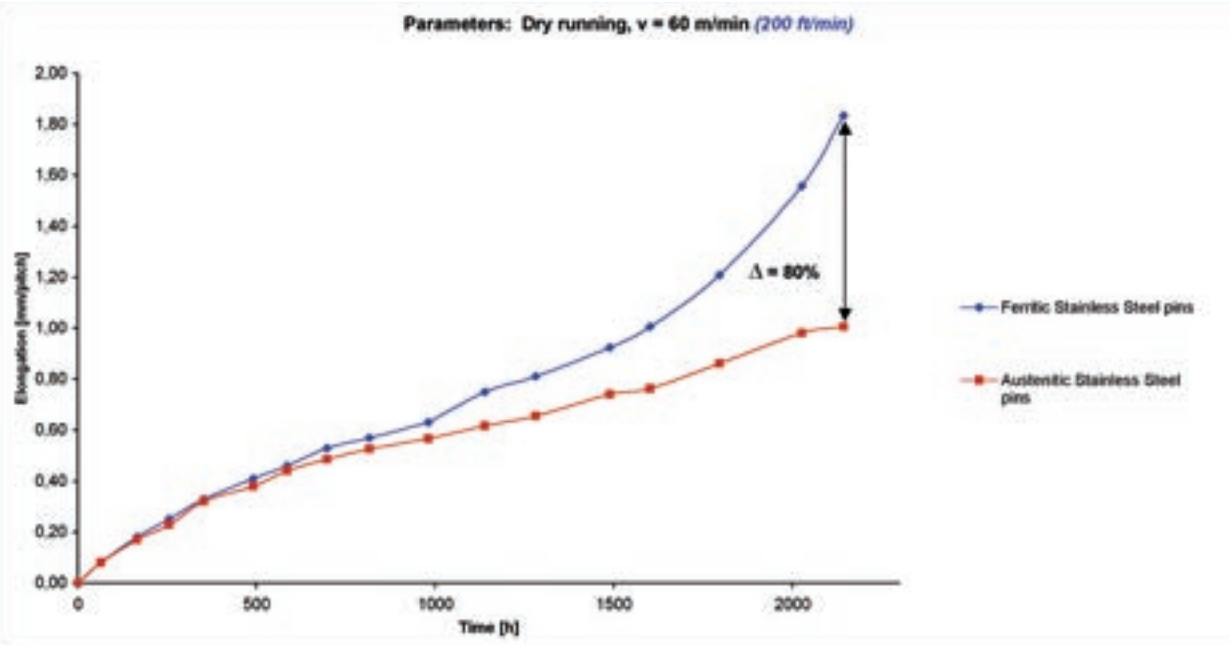

FliteTop®

STRAIGHT RUNNING CHAIN

M815 SERIES - FLIGHT GAP 2,8 mm
REDUCED BACKFLEXING RADIUS (75 mm)

Reference	Standard Materials SS-4	P	SS
M815			

Pin Material: Cold rolled austenitic stainless steel.

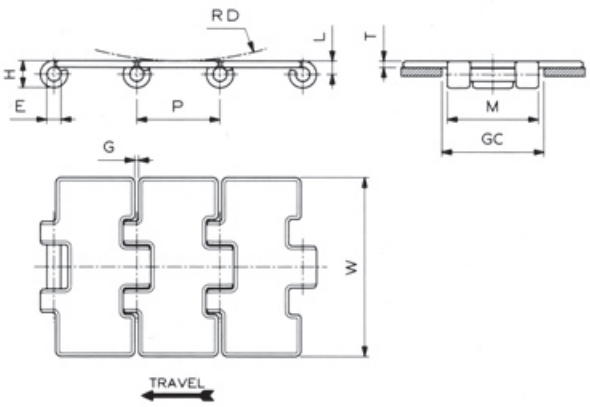

Dimension	mm	inches
P	38,1	1.5
T	3	.118
M	42	1.654
L	6,4	.252
H	13	.512
E	6,35	.25
RD	75	2.953
GC	44	1.732

M815 (Straight Running - Gap 2,8 mm)

Chain material see page 12
Sprockets and Idler wheels see pages 172÷178
Sprocket positioning see page 299

MATERIAL	REGINA REF.	CHAIN WIDTH W		GAP G		SURFACE FINISH Ra	YIELD LOAD AVERAGE		CHAIN WEIGHT	
		mm	inches	mm	inches	µm	N	lbs	kg/m	lbs/ft
FERRITIC STAINLESS STEEL (SS-4)	**SSM 815-4 K 3 ¼**	82,6	3.25	2,8	0.110	0,3	5800	1,305	2,73	1.83
PRIMA (P)	**PM 815 K 3 ¼**	82,6	3.25	2,8	0.110	0,3	8500	1,913	2,52	1.69
AUSTENITIC STAINLESS STEEL (SS)	**SSM 815 K 3 ¼**	82,6	3.25	2,8	0.110	0,4	5600	1,260	2,73	1.83

Standard length: 3,048 m (10 feet)

FliteTop®

STRAIGHT RUNNING CHAIN

815 SERIES - FLIGHT GAP 1,8 mm

Reference	Standard Materials S
815	■

Pin Material: Case hardened steel.

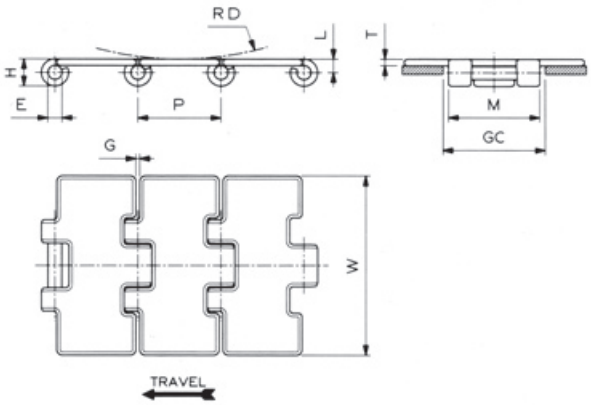

Dimension	mm	inches
P	38,1	1.5
T	3	.118
M	42	1.654
L	6,4	.252
H	13	.512
E	6,35	.25
RD	150	5.906
GC	44	1.732

815 (Straight Running - Gap 1,8 mm)

Chain material see page 12
Sprockets and Idler wheels see pages 172÷178
Sprocket positioning see page 299

MATERIAL	REGINA REF.	CHAIN WIDTH W		GAP G		YIELD LOAD AVERAGE		CHAIN WEIGHT	
		mm	inches	mm	inches	N	lbs	kg/m	lbs/ft
CARBON STEEL (S)	S 815 K 2 ¼	57,1	2.25	1,8	0.071	12300	2,768	2,05	1.38
	S 815 K 2 ½	63,5	2.50	1,8	0.071	12300	2,768	2,15	1.44
	S 815 K 2 ⅝	66,7	2.63	1,8	0.071	12300	2,768	2,40	1.61
	S 815 K 3 ¼	82,6	3.25	1,8	0.071	12300	2,768	2,73	1.83
	S 815 K 3 ½	88,9	3.50	1,8	0.071	12300	2,768	3,00	2.02
	S 815 K 4	101,6	4.00	1,8	0.071	12300	2,768	3,20	2.15
	S 815 K 4 ½	114,3	4.50	1,8	0.071	12300	2,768	3,48	2.34
	S 815 K 6	152,4	6.00	1,8	0.071	12300	2,768	4,38	2.94
	S 815 K 7 ½	190,5	7.50	1,8	0.071	12300	2,768	5,27	3.54

Standard length: 3,048 m (10 feet)

FliteTop®

STRAIGHT RUNNING CHAIN

815 SERIES - FLIGHT GAP 1,8 mm

Reference	Standard Materials P	SS
815		

Pin Material: Cold rolled austenitic stainless steel

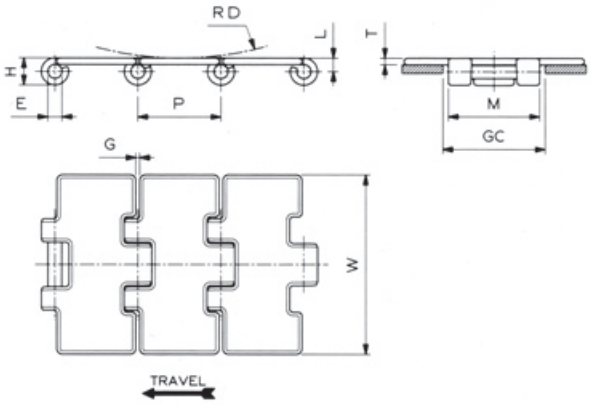

Dimension	mm	inches
P	38,1	1.5
T	3	.118
M	42	1.654
L	6,4	.252
H	13	.512
E	6,35	.25
RD	150	5.906
GC	44	1.732

815 (Straight Running - Gap 1,8 mm)

Chain material see page 12

Sprockets and Idler wheels see pages 172÷178

Sprocket positioning see page 299

MATERIAL	REGINA REF.	CHAIN WIDTH W		GAP G		SURFACE FINISH Ra	YIELD LOAD AVERAGE		CHAIN WEIGHT	
		mm	inches	mm	inches	µm	N	lbs	kg/m	lbs/ft
PRIMA (P)	P 815 K 2 ¼	57,1	2.25	1,8	0.071	0,3	8500	1,913	1,99	1.34
	P 815 K 2 ½	63,5	2.50	1,8	0.071	0,3	8500	1,913	2,13	1.43
	P 815 K 2 ⅝	66,7	2.63	1,8	0.071	0,3	8500	1,913	2,19	1.47
	P 815 K 2 ⅞	73,0	2.87	1,8	0.071	0,3	8500	1,913	2,33	1.57
	P 815 K 3	76,2	3.00	1,8	0.071	0,3	8500	1,913	2,40	1.61
	P 815 K 3 ¼	82,6	3.25	1,8	0.071	0,3	8500	1,913	2,54	1.71
	P 815 K 3 ½	88,9	3.50	1,8	0.071	0,3	8500	1,913	2,68	1.80
	P 815 K 4	101,6	4.00	1,8	0.071	0,3	8500	1,913	2,97	2.00
	P 815 K 4 ½	114,3	4.50	1,8	0.071	0,3	8500	1,913	3,25	2.18
	P 815 K 6	152,4	6.00	1,8	0.071	0,3	8500	1,913	4,09	2.75
	P 815 K 7 ½	190,5	7.50	1,8	0.071	0,3	8500	1,913	4,95	3.33
AUSTENITIC STAINLESS STEEL (SS)	SS 815 K 2 ¼	57,1	2.25	1,8	0.071	0,4	5600	1,260	2,18	1.46
	SS 815 K 2 ½	63,5	2.50	1,8	0.071	0,4	5600	1,260	2,32	1.56
	SS 815 K 2 ⅝	66,7	2.63	1,8	0.071	0,4	5600	1,260	2,40	1.61
	SS 815 K 2 ⅞	73,0	2.87	1,8	0.071	0,4	5600	1,260	2,56	1.72
	SS 815 K 3 ¼	82,6	3.25	1,8	0.071	0,4	5600	1,260	2,73	1.83
	SS 815 K 3 ½	88,9	3.50	1,8	0.071	0,4	5600	1,260	3,00	2.02
	SS 815 K 4	101,6	4.00	1,8	0.071	0,4	5600	1,260	3,20	2.15
	SS 815 K 4 ½	114,3	4.50	1,8	0.071	0,4	5600	1,260	3,48	2.34
	SS 815 K 6	152,4	6.00	1,8	0.071	0,4	5600	1,260	4,38	2.94
	SS 815 K 7 ½	190,5	7.50	1,8	0.071	0,4	5600	1,260	5,27	3.54

Standard length: 3,048 m (10 feet)

FliteTop®

STRAIGHT RUNNING CHAIN

915 SERIES - FLIGHT GAP 1,6 mm

- Reduced trasversal and longitudinal gap for better product handling.
- 83.8 mm wide chains available: for gap reduction on 85 mm transversal pitch conveyors.
- XP series: brushed hinges for inliners/inclined combiners

- HD: Increased pin hardness for better resistance to chain elongation

Reference	Standard Materials SS-4	P
915	■	■
HD 915		■

Pin Material: Cold rolled austenitic stainless steel (for 915 series).
Hardened martensitic stainless steel (for HD 915 series).

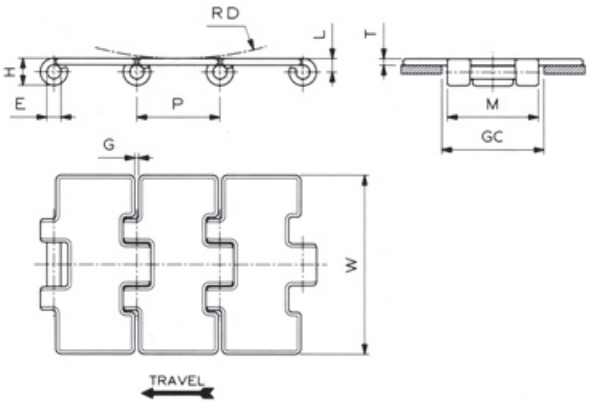

Dimension	mm	inches
P	38,1	1.5
T	3	.118
M	42	1.654
L	6,4	.252
H	13	.512
E	6,35	.25
RD	150	5.906
GC	44	1.732

915 (Straight Running - Gap 1,6 mm)

Chain material see page 12
Sprockets and Idler wheels see pages 172÷178
Sprocket positioning see page 299

MATERIAL	REGINA REF.	CHAIN WIDTH W		GAP G		SURFACE FINISH Ra	YIELD LOAD AVERAGE		CHAIN WEIGHT	
		mm	inches	mm	inches	µm	N	lbs	kg/m	lbs/ft
FERRITIC STAINLESS STEEL (SS-4)	SS 915-4 K 3 ¼	82,6	3.25	1,6	0.063	0,3	5800	1,305	2,52	1.69
	SS 915-4 K 83,8	83,8	3.30	1,6	0.063	0,3	5800	1,305	2,55	1.71
	SS 915-4 K 4 ½	114,3	4.50	1,6	0.063	0,3	5800	1,305	3,21	2.16
	SS 915-4 K 7 ½	190,5	7.50	1,6	0.063	0,3	5800	1,305	4,87	3.27
PRIMA (P)	P 915 K 3 ¼	82,6	3.25	1,6	0.063	0,3	8500	1,913	2,57	1.73
	P 915 K 83,8	83,8	3.30	1,6	0.063	0,3	8500	1,913	2,60	1.75
	P 915 K 4 ½	114,3	4.50	1,6	0.063	0,3	8500	1,913	3,28	2.20
	P 915 K 7 ½	190,5	7.50	1,6	0.063	0,3	8500	1,913	4,98	3.35
	XP 915 K 3 ¼	82,6	3.25	1,6	0.063	0,2	8500	1,913	2,57	1.73
	XP 915 K 83,8	83,8	3.30	1,6	0.063	0,2	8500	1,913	2,60	1.75

Standard length: 3,048 m (10 feet)

NEW

HD 915 (Straight Running - Gap 1,6 mm Increased Pin Hardness)

Chain material see page 12
Sprockets and Idler wheels see pages 172÷178
Sprocket positioning see page 299

MATERIAL	REGINA REF.	CHAIN WIDTH W		GAP G		SURFACE FINISH Ra	YIELD LOAD AVERAGE		CHAIN WEIGHT	
		mm	inches	mm	inches	µm	N	lbs	kg/m	lbs/ft
PRIMA (P)	PHD 915 K 3 ¼	82,6	3.25	1,6	0.063	0,3	8500	1,913	2,57	1.73
	PHD 915 K 83,8	83,8	3.30	1,6	0.063	0,3	8500	1,913	2,60	1.75
	PHD 915 K 4 ½	114,3	4.50	1,6	0.063	0,3	8500	1,913	3,28	2.20
	PHD 915 K 7 ½	190,5	7.50	1,6	0.063	0,3	8500	1,913	4,98	3.35

Standard length: 3,048 m (10 feet)

FliteTop®

STRAIGHT RUNNING CHAIN

2815 SERIES - DOUBLE HINGE

Reference	Standard Materials S	SS-4	P	SS
2815	■	▭	▭	▭

Pin Material: Case hardened steel (for carbon steel chains).
Cold rolled austenitic stainless steel (for stainless steel chains).

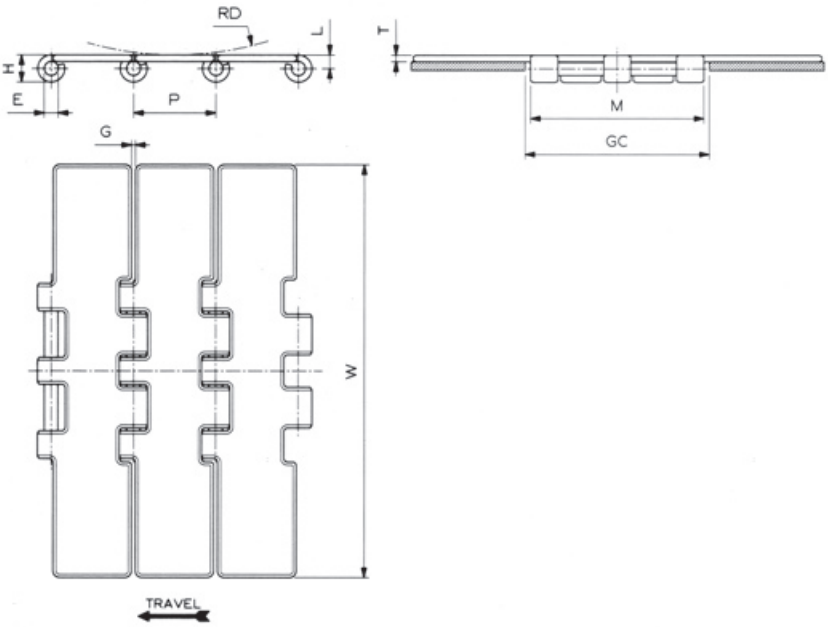

Dimension	mm	inches
P	38,1	1.5
T	3	.118
M	80	3.15
L	6,4	.252
H	13	.512
E	6,35	.25
RD	150	5.906
GC	82,5	3.248

Chain material see page 12

Sprockets and Idler wheels see pages 179÷183

Sprocket positioning see page 299

2815 (Straight Running - Double Hinge)

MATERIAL	REGINA REF.	CHAIN WIDTH W		GAP G		SURFACE FINISH Ra	YIELD LOAD AVERAGE		CHAIN WEIGHT	
		mm	inches	mm	inches	µm	N	lbs	kg/m	lbs/ft
CARBON STEEL (S)	**S 2815 K 7 ½**	190,5	7.50	1,8	0.071	-	18000	4,050	5,90	3.96
FERRITIC STAINLESS STEEL (SS-4)	**SS 2815-4 K 7 ½**	190,5	7.50	1,8	0.071	0,3	10300	2,318	5,40	3.62
PRIMA (P)	**P 2815 K 7 ½**	190,5	7.50	1,8	0.071	0,3	15000	3,375	5,62	3.77
AUSTENITIC STAINLESS STEEL (SS)	**SS 2815 K 7 ½**	190,5	7.50	1,8	0.071	0,4	10600	2,385	5,40	3.62

Standard length: 3,048 m (10 feet)

FliteTop®

STRAIGHT RUNNING CHAIN

9157 SERIES - HEAVY DUTY 57 mm HINGE.

- HD: Increased pin hardness for better resistance to chain elongation.

Reference	Standard Materials P
HD 9157	

Pin Material: Hardened martensitic stainless steel

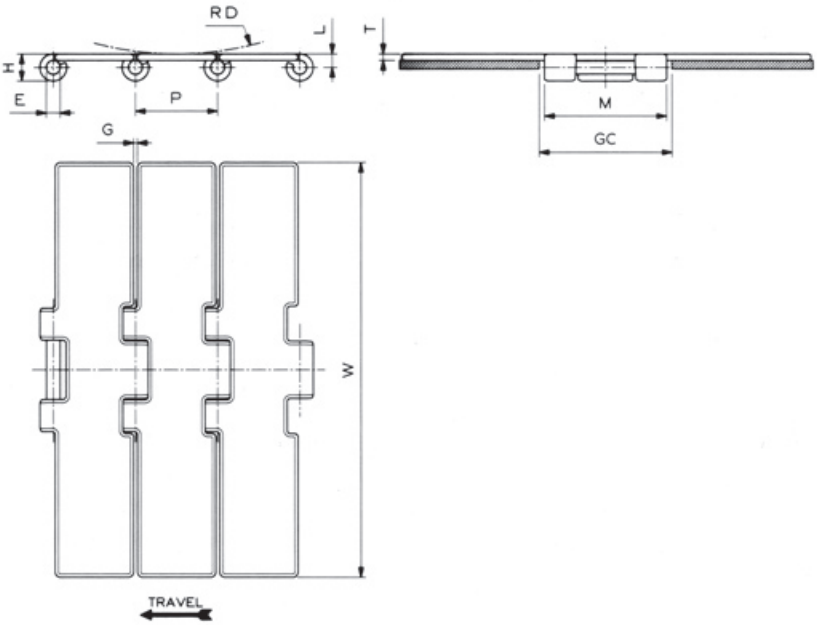

Dimension	mm	inches
P	38,1	1.5
T	3	.118
M	57	2.244
L	6,4	.252
H	13	.512
E	6,35	.25
RD	150	5.906
GC	60	2.362

Chain material see page 12
Sprockets and Idler wheels see pages 184÷185
Sprocket positioning see page 299

NEW

HD 9157 (Straight Running - Heavy Duty - 57 mm Hinge - Increased Pin Hardness)

MATERIAL	REGINA REF.	CHAIN WIDTH W		GAP G		SURFACE FINISH Ra	YIELD LOAD AVERAGE		CHAIN WEIGHT	
		mm	inches	mm	inches	µm	N	lbs	kg/m	lbs/ft
PRIMA (P)	**PHD 9157 K 7 ½**	190,5	7.50	1,6	0.063	0,3	10500	2,363	5,28	3.55

Standard length: 3,048 m (10 feet)

FliteTop®

STRAIGHT RUNNING CHAIN

803 SERIES - MINI HINGE

Reference	Standard Materials P
803	

Pin Material: Cold rolled austenitic stainless steel

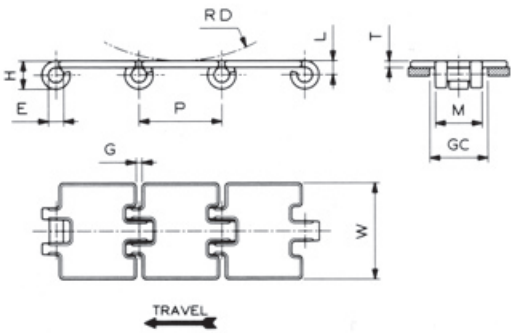

Dimension	mm	inches
P	38,1	1.5
T	3	.118
M	22	.866
L	6,4	.252
H	13	.512
E	6,35	.25
RD	75	2.953
GC	24	.945

803 (Straight Running - Mini Hinge)

Chain material see page 12
Sprockets see pages 186÷187
Sprocket positioning see page 299

MATERIAL	REGINA REF.	CHAIN WIDTH W		GAP G		SURFACE FINISH Ra	YIELD LOAD AVERAGE		CHAIN WEIGHT	
		mm	inches	mm	inches	µm	N	lbs	kg/m	lbs/ft
PRIMA (P)	P 803 K 1 ¼	31,8	1.25	2,8	0.110	0,3	4100	923	1,07	0.72
	P 803 K 1 ¾	44,5	1.75	2,8	0.110	0,3	4100	923	1,34	0.90

Standard length: 3,048 m (10 feet)

FliteTop®

STRAIGHT RUNNING CHAIN

515 SERIES - 1" PITCH

- Particularly suitable for bottle washer infeed applications

Reference	Standard Materials SS
515	

Pin Material: Cold rolled austenitic stainless steel.

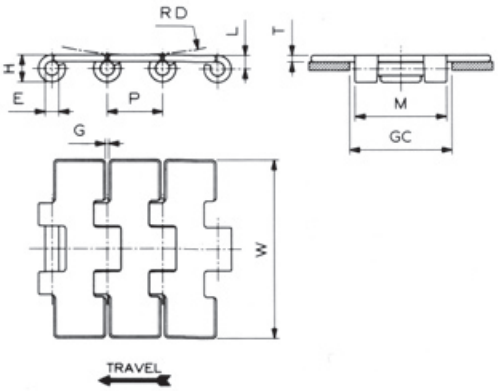

Dimension	mm	inches
P	25,4	1
T	3	.118
M	42	1.654
L	6,4	.252
H	13	.512
E	6,35	.25
RD	100	3.937
GC	44	1.732

Chain material see page 12
Sprockets see pages 188÷189
Sprocket positioning see page 299

515 (Straight Running - Short Pitch)

MATERIAL	REGINA REF.	CHAIN WIDTH W		GAP G		SURFACE FINISH Ra	YIELD LOAD AVERAGE		CHAIN WEIGHT	
		mm	inches	mm	inches	µm	N	lbs	kg/m	lbs/ft
AUSTENITIC STAINLESS STEEL (SS)	SS 515 K 50	50,0	1.97	1,6	0.063	0,4	5600	1,260	2,20	1.48
	SS 515 K 55	55,0	2.17	1,6	0.063	0,4	5600	1,260	2,30	1.55
	SS 515 K 60	60,0	2.36	1,6	0.063	0,4	5600	1,260	2,40	1.61
	SS 515 K 2 ½	63,5	2.50	1,6	0.063	0,4	5600	1,260	2,50	1.68
	SS 515 K 72	72,0	2.83	1,6	0.063	0,4	5600	1,260	2,70	1.81
	SS 515 K 3 ¼	82,6	3.25	1,6	0.063	0,4	5600	1,260	2,90	1.95
	SS 515 K 3 ½	88,9	3.50	1,6	0.063	0,4	5600	1,260	3,00	2.02
	SS 515 K 100	100,0	3.94	1,6	0.063	0,4	5600	1,260	3,30	2.22

Standard length: 3,048 m (10 feet)

FliteTop®

SIDEFLEXING CHAIN

881 SERIES - BEVEL

Reference	Standard Materials S	SS
881		

Pin Material: Case hardened steel (for carbon steel chains).
Cold rolled austenitic stainless steel (for stainless steel chains).

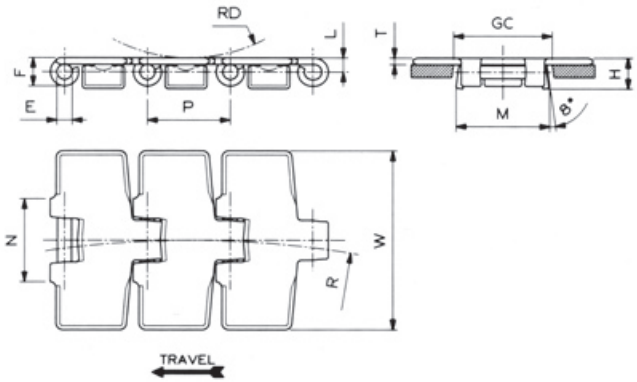

Dimension	mm	inches
P	38,1	1.5
T	3	.118
M	43	1.693
N	38,3	1.508
L	6,4	.252
H	14,5	.571
E	6,35	.25
F	13	.512
RD	75	2.953
GC (Straight)	44,5	1.752
GC (Curve)	41,5	1.634

881 (Sideflexing - Bevel)

Chain material see page 12
Sprockets and Idler wheels see pages 190÷195
Corner tracks see page 283
Sprocket positioning see page 299

MATERIAL	REGINA REF.	CHAIN WIDTH W		SURFACE FINISH Ra	SIDEFLEXING RADIUS R		YIELD LOAD AVERAGE		CHAIN WEIGHT	
		mm	inches	µm	mm	inches	N	lbs	kg/m	lbs/ft
CARBON STEEL (S)	S 881 K 3 ¼	82,6	3.25	-	457,2	18	11600	2,610	3,00	2.02
	S 881 K 4 ½	114,3	4.50	-	609,6	24	11600	2,610	3,70	2.49
	S 881 K 7 ½	190,5	7.50	-	609,6	24	11600	2,610	5,50	3.70
AUSTENITIC STAINLESS STEEL (SS)	SS 881 K 3 ¼	82,6	3.25	0,4	457,2	18	5600	1,260	3,00	2.02
	SS 881 K 4 ½	114,3	4.50	0,4	609,6	24	5600	1,260	3,70	2.49
	SS 881 K 7 ½	190,5	7.50	0,4	609,6	24	5600	1,260	5,50	3.70

Standard length: 3,048 m (10 feet)

FliteTop®

SIDEFLEXING CHAIN

881T SERIES - TAB

Reference	Standard Materials S	SS
881T		

Pin Material: Case hardened steel (for carbon steel chains). Cold rolled austenitic stainless steel (for stainless steel chains).

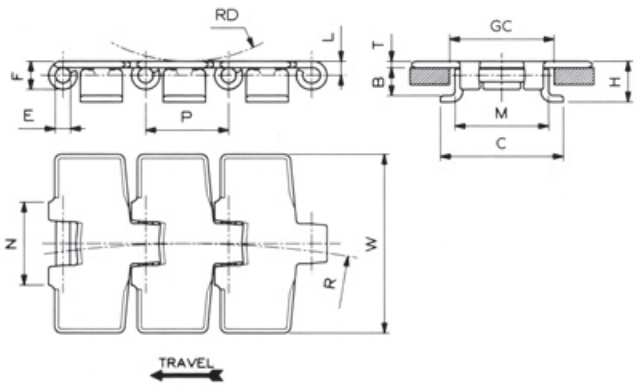

Dimension	mm	inches
P	38,1	1.5
T	3	.118
M	43	1.693
N	38,3	1.508
C	56	2.205
L	6,4	.252
H	19,3	.76
E	6,35	.25
B	12,8	.504
F	13	.512
RD	75	2.953
GC (Straight)	46	1.811
GC (Curve)	44,5	1.752

881T (Sideflexing - Tab)

Chain material see page 12
Sprockets and Idler wheels see pages 190÷195
Corner tracks see page 280
Sprocket positioning see page 299

MATERIAL	REGINA REF.	CHAIN WIDTH W		SURFACE FINISH Ra	SIDEFLEXING RADIUS R		YIELD LOAD AVERAGE		CHAIN WEIGHT	
		mm	inches	µm	mm	inches	N	lbs	kg/m	lbs/ft
CARBON STEEL (S)	S 881T K 3 ¼	82,6	3.25	-	457,2	18	11600	2,610	3,20	2.15
	S 881T K 4 ½	114,3	4.50	-	609,6	24	11600	2,610	3,90	2.62
	S 881T K 7 ½	190,5	7.50	-	609,6	24	11600	2,610	5,70	3.83
AUSTENITIC STAINLESS STEEL (SS)	SS 881T K 3 ¼	82,6	3.25	0,4	457,2	18	5600	1,260	3,20	2.15
	SS 881T K 4 ½	114,3	4.50	0,4	609,6	24	5600	1,260	3,90	2.62
	SS 881T K 7 ½	190,5	7.50	0,4	609,6	24	5600	1,260	5,70	3.83

Standard length: 3.048 m (10 feet)

FliteTop®

SIDEFLEXING CHAIN

981 SERIES - BEVEL, REDUCED FLIGHT GAP

- 83.8 mm wide chains available: for gap reduction on 85 mm transversal pitch conveyors.

Reference	Standard Materials P
981	

Pin Material: Cold rolled austenitic stainless steel.

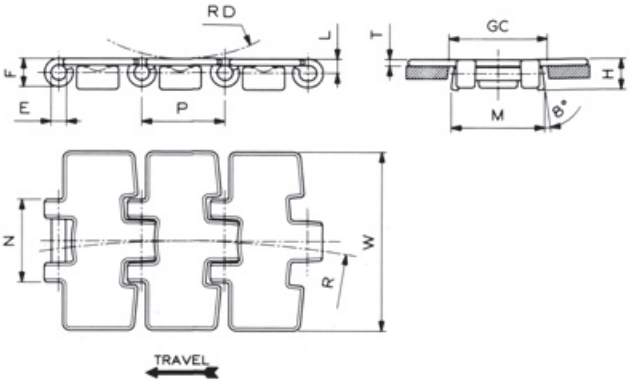

Dimension	mm	inches
P	38,1	1.5
T	3	.118
M	43	1.693
N	38,3	1.508
L	6,4	.252
H	14,5	.571
E	6,35	.25
F	13	.512
RD	75	2.953
GC (Straight)	44,5	1.752
GC (Curve)	41,5	1.634

981 (Sideflexing - Bevel)

Chain material see page 12
Sprockets and Idler wheels see pages 190÷195
Corner tracks see page 283
Sprocket positioning see page 299

MATERIAL	REGINA REF.	CHAIN WIDTH W		SURFACE FINISH Ra	SIDEFLEXING RADIUS R		YIELD LOAD AVERAGE		CHAIN WEIGHT	
		mm	inches	µm	mm	inches	N	lbs	kg/m	lbs/ft
PRIMA (P)	P 981 K 3 ¼	82,6	3.25	0,3	457,2	18	8000	1,800	2,72	1.83
	P 981 K 83,8	83,8	3.30	0,3	457,2	18	8000	1,800	2,75	1.85
	P 981 K 4 ½	114,3	4.50	0,3	609,6	24	8000	1,800	3,35	2.25
	P 981 K 7 ½	190,5	7.50	0,3	609,6	24	8000	1,800	4,76	3.20

Standard length: 3,048 m (10 feet)

FliteTop®

SIDEFLEXING CHAIN

981T SERIES - TAB, REDUCED FLIGHT GAP

- 83.8 mm wide chains available: for gap reduction on 85 mm transversal pitch conveyors.

Reference	Standard Materials P
981T	

Pin Material: Cold rolled austenitic stainless steel.

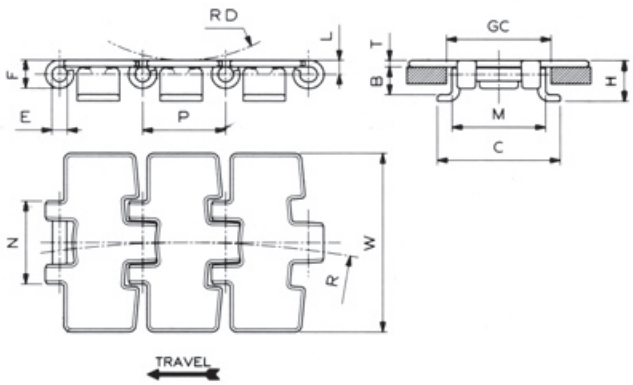

Dimension	mm	inches
P	38,1	1.5
T	3	.118
M	43	1.693
N	38,3	1.508
C	56	2.205
L	6,4	.252
H	19,3	.76
E	6,35	.25
B	12,8	.504
F	13	.512
RD	75	2.953
GC (Straight)	46	1.811
GC (Curve)	44,5	1.752

981T (Sideflexing - Tab)

Chain material see page 12
Sprockets and Idler wheels see pages 190÷195
Corner tracks see page 280
Sprocket positioning see page 299

MATERIAL	REGINA REF.	CHAIN WIDTH W		SURFACE FINISH Ra	SIDEFLEXING RADIUS R		YIELD LOAD AVERAGE		CHAIN WEIGHT	
		mm	inches	µm	mm	inches	N	lbs	kg/m	lbs/ft
PRIMA (P)	P 981T K 3 ¼	82,6	3.25	0,3	457,2	18	8000	1,800	2,95	1.98
	P 981T K 83,8	83,8	3.30	0,3	457,2	18	8000	1,800	2,96	1.98
	P 981T K 4 ½	114,3	4.50	0,3	609,6	24	8000	1,800	3,58	2.41
	P 981T K 7 ½	190,5	7.50	0,3	609,6	24	8000	1,800	4,99	3.35

Standard length: 3,048 m (10 feet)

FliteTop®

SIDEFLEXING CHAIN

981M SERIES - MAGNETIC, REDUCED FLIGHT GAP

- Brushed side hinge to reduce wear of magnetic curves.
- 83.8 mm wide chains available: for gap reduction on 85 mm transversal pitch conveyors.

- HD: Increased pin hardness for better resistance to chain elongation.

Reference	Standard Materials SS-4	P
981M	▭	▭
HD 981M		▭

Pin Material: Cold rolled austenitic stainless steel (for 981M series).
Hardened martensitic stainless steel (for HD 981M series).

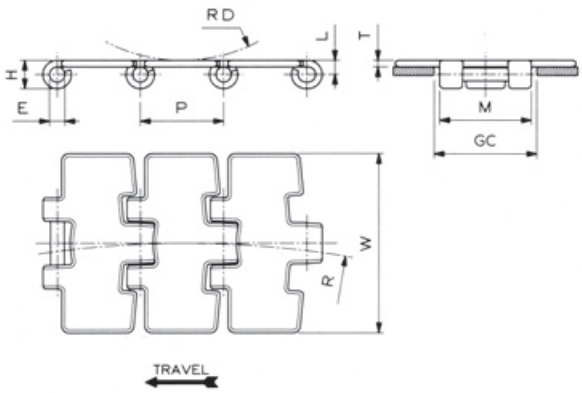

Dimension	mm	inches
P	38,1	1.5
T	3	.118
M	42	1.654
L	6,4	.252
H	13	.512
E	6,35	.25
RD	75	2.953
GC (Straight)	44	1.732
GC (Curve)	44	1.732

981M (Sideflexing - Magnetic)

Chain material see page 12 | Sprockets and Idler wheels see pages 172÷178 | Corner tracks see page 241 | Sprocket positioning see page 299

MATERIAL	REGINA REF.	CHAIN WIDTH W		SURFACE FINISH Ra	SIDEFLEXING RADIUS R		YIELD LOAD AVERAGE		CHAIN WEIGHT	
		mm	inches	µm	mm	inches	N	lbs	kg/m	lbs/ft
FERRITIC STAINLESS STEEL (SS-4)	SS 981M-4 K 3 ¼	82,6	3.25	0,3	500	19.69	5400	1,215	2,40	1.61
	SS 981M-4 K 83,8	83,8	3.30	0,3	500	19.69	5400	1,215	2,42	1.63
PRIMA (P)	P 981M K 3 ¼	82,6	3.25	0,3	500	19.69	8500	1,913	2,46	1.65
	P 981M K 83,8	83,8	3.30	0,3	500	19.69	8500	1,913	2,48	1.67
	P 981M K 4 ½	114,3	4.50	0,3	500	19.69	8500	1,913	3,08	2.07
	P 981M K 7 ½	190,5	7.50	0,3	500	19.69	8500	1,913	4,47	3.00

Standard length: 3,048 m (10 feet)

NEW

Chain material see page 12 | Sprockets and Idler wheels see pages 172÷178 | Corner tracks see page 241 | Sprocket positioning see page 299

HD 981M (Sideflexing - Magnetic - Increased Pin Hardness)

MATERIAL	REGINA REF.	CHAIN WIDTH W		SURFACE FINISH Ra	SIDEFLEXING RADIUS R		YIELD LOAD AVERAGE		CHAIN WEIGHT	
		mm	inches	µm	mm	inches	N	lbs	kg/m	lbs/ft
PRIMA (P)	PHD 981M K 3 ¼	82,6	3.25	0,3	500	19.69	8500	1,913	2,46	1.65
	PHD 981M K 83,8	83,8	3.30	0,3	500	19.69	8500	1,913	2,48	1.67
	PHD 981M K 4 ½	114,3	4.50	0,3	500	19.69	8500	1,913	3,08	2.07
	PHD 981M K 7 ½	190,5	7.50	0,3	500	19.69	8500	1,913	4,47	3.00

Standard length: 3,048 m (10 feet)

FliteTop®

SIDEFLEXING CHAIN

9857M SERIES - MAGNETIC, HEAVY DUTY 57 mm HINGE

- Brushed side hinge to reduce wear of magnetic curves.
- HD: Increased pin hardness for better resistance to chain elongation.

Reference	Standard Materials P
HD 9857M	

Pin Material: Hardened martensitic stainless steel.

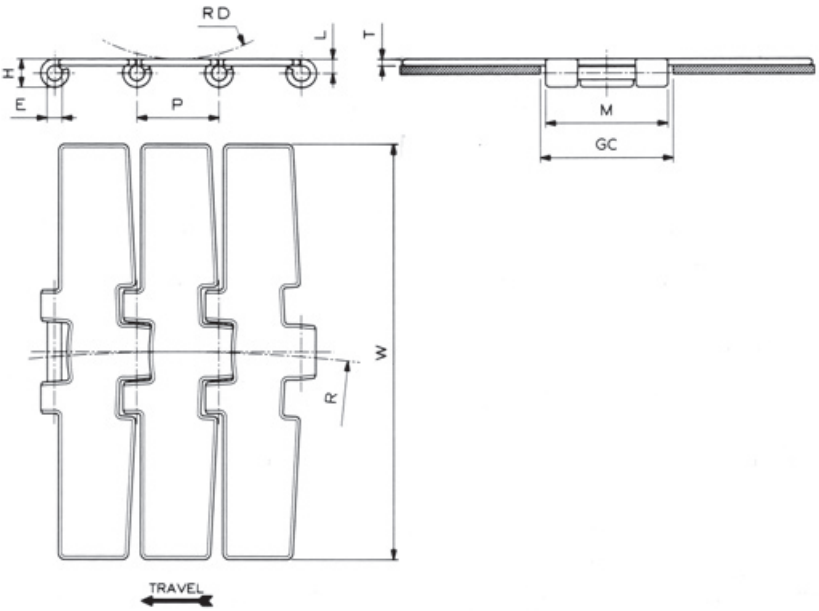

Dimension	mm	inches
P	38,1	1.5
T	3	.118
M	57	2.244
L	6,4	.252
H	13	.512
E	6,35	.25
RD	75	2.953
GC (Straight)	60	2.362
GC (Curve)	60	2.362

Chain material see page 12
Sprockets and Idler wheels see pages 184÷185
Corner tracks see page 241
Sprocket positioning see page 299

NEW

HD 9857M (Sideflexing - Magnetic - Heavy Duty 57 mm Hinge - Increased Pin Hardness)

MATERIAL	REGINA REF.	CHAIN WIDTH W		SURFACE FINISH Ra	SIDEFLEXING RADIUS R		YIELD LOAD AVERAGE		CHAIN WEIGHT	
		mm	inches	µm	mm	inches	N	lbs	kg/m	lbs/ft
PRIMA (P)	**PHD 9857M K 7 ½**	190,5	7.50	0,3	750	29.53	10500	2,363	4,97	3.34

Standard length: 3,048 m (10 feet)

FliteTop®

SIDEFLEXING CHAIN

982T SERIES - TAB, REDUCED SIDEFLEXING RADIUS (200 mm)

- Suitable for use with turning discs (Ref. CMA 09 878)

Reference	Standard Materials SS
982T	

Pin Material: Cold rolled austenitic stainless steel.

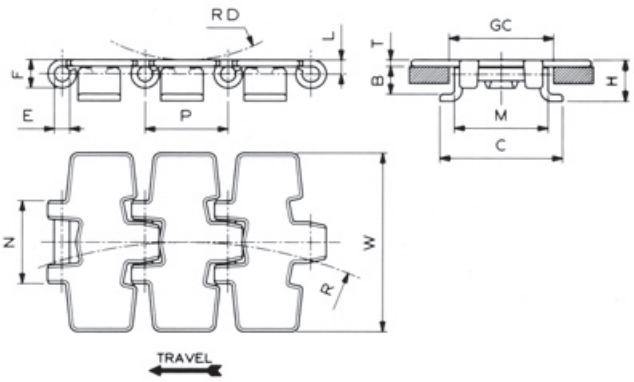

Dimension	mm	inches
P	38,1	1.5
T	3	.118
M	43	1.693
N	38,3	1.508
C	56	2.205
L	6,4	.252
H	19,3	.76
E	6,35	.25
B	12,8	.504
F	13	.512
RD	75	2.953
GC (Straight)	46	1.811
GC (Curve)	44,5	1.752

Chain material see page 12

Sprockets and Idler wheels see pages 190÷195

Sprocket positioning see page 299

982T (Sideflexing - Tab - Reduced Sideflexing Radius)

MATERIAL	REGINA REF.	CHAIN WIDTH W		SURFACE FINISH Ra	SIDEFLEXING RADIUS R		YIELD LOAD AVERAGE		CHAIN WEIGHT	
		mm	inches	µm	mm	inches	N	lbs	kg/m	lbs/ft
AUSTENITIC STAINLESS STEEL (SS)	**SS 982T K 3 ¼**	82,6	3.25	0,4	200	7.874	5000	1,125	3,00	2.02

Standard length: 3,048 m (10 feet)

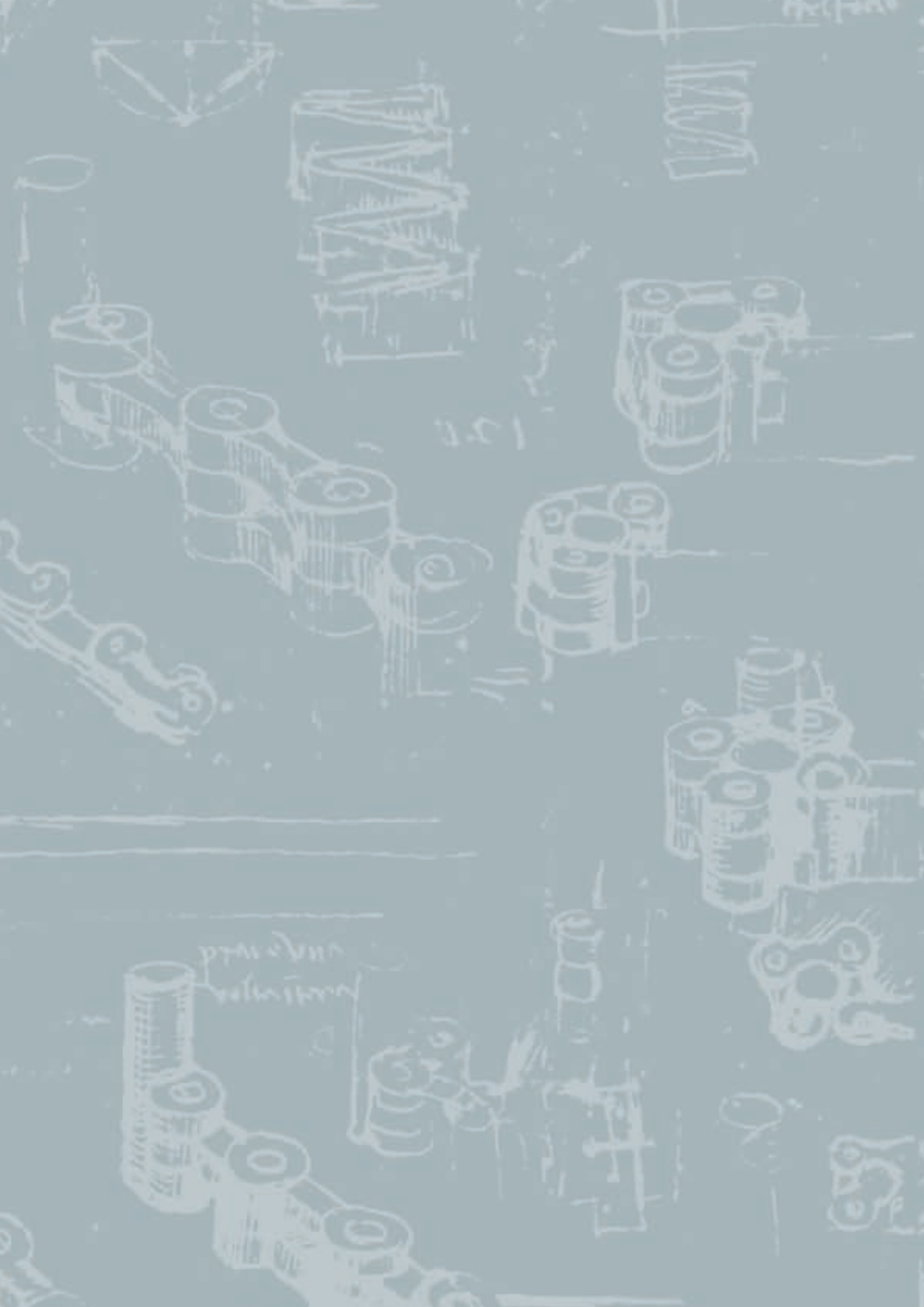

FliteTop®

Rubber Surface Stainless Steel Chains

FliteTop®

STAINLESS STEEL CHAINS WITH RUBBER SURFACE

APPLICATIONS:

- Conveying of plastic crates on inclined conveyors (Maximum ramp angle of 25°; for higher angles, please contact Regina Application Engineering).

BENEFITS:

- The nitrile rubber pad offers the best wear resistance and long life. Vulcanization process offers optimum adhesion of the rubber pads to the flight.

Rubber standard material

RUBBER MATERIAL	COLOUR	AVERAGE HARDNESS	MIN TEMPERATURE		MAX TEMPERATURE WITHOUT LUBRICATION		MAX TEMPERATURE DAMP ENVIRONMENT		NON SUITABLE WITH	RESISTANT TO
			°C	°F	°C	°F	°C	°F		
NITRILE	BLACK	55 ShA	-10	+14	+110	+230	+80	+176	STRONG ACID AND BASES	OILS

FliteTop®

STRAIGHT RUNNING CHAIN WITH RUBBER SURFACE

G 815 SERIES - SINGLE HINGE

Reference	Standard Materials P
G 815	

Pad Material: Nitrile rubber (see page 36).
Pin Material: Cold rolled austenitic stainless steel

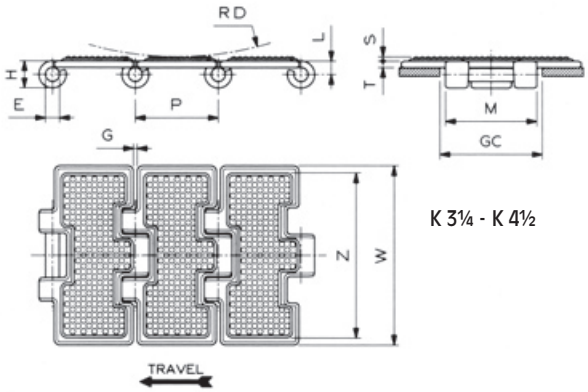

K 3¼ - K 4½

Dimension	mm	inches
P	38,1	1.5
T	3	.118
S	2	.079
M	42	1.654
L	6,4	.252
H	13	.512
E	6,35	.25
Z	76	2.992
RD	150	5.906
GC	44	1.732

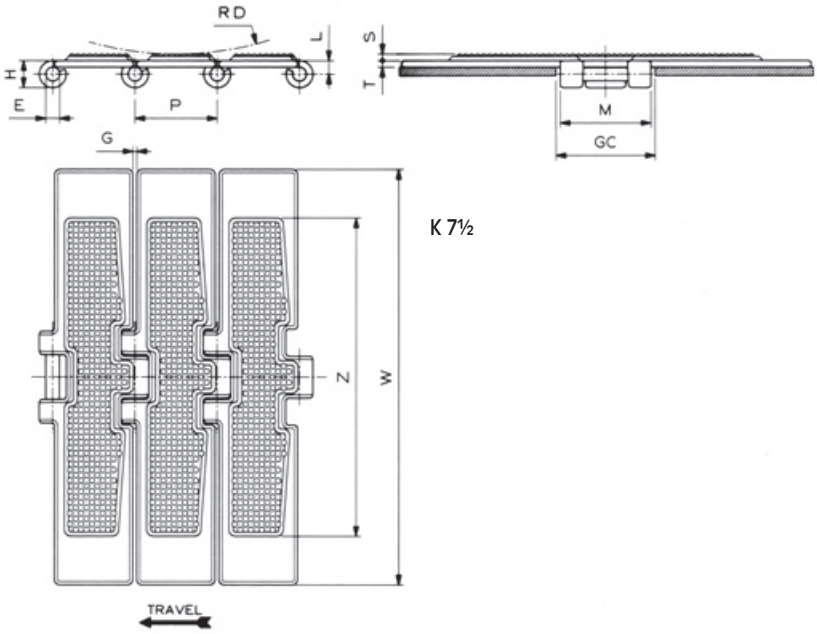

K 7½

Dimension	mm	inches
P	38,1	1.5
T	3	.118
S	2,8	.11
M	42	1.654
L	6,4	.252
H	13	.512
E	6,35	.25
Z	146	5.748
RD	150	5.906
GC	44	1.732

G 815 (Straight Running - Rubber Surface)

Chain material see page 12
Sprockets and Idler wheels see pages 172÷178
Sprocket positioning see page 299

MATERIAL	REGINA REF.	CHAIN WIDTH W		GAP G		YIELD LOAD AVERAGE		CHAIN WEIGHT	
		mm	inches	mm	inches	N	lbs	kg/m	lbs/ft
PRIMA (P)	PG 815 K 3 ¼	82,6	3.25	1,8	0.071	8500	1,913	2,66	1.79
	PG 815 K 4 ½	114,3	4.50	1,8	0.071	8500	1,913	3,37	2.26
	PG 815 K 7 ½	190,5	7.50	1,8	0.071	8500	1,913	5,24	3.52

Standard length: 3,048 m (10 feet)

FliteTop®

STRAIGHT RUNNING CHAIN WITH RUBBER SURFACE

G 2815 SERIES - DOUBLE HINGE

Reference	Standard Materials P
G 2815	

Pad Material: Nitrile rubber (see page 36).
Pin Material: Cold rolled austenitic stainless steel.

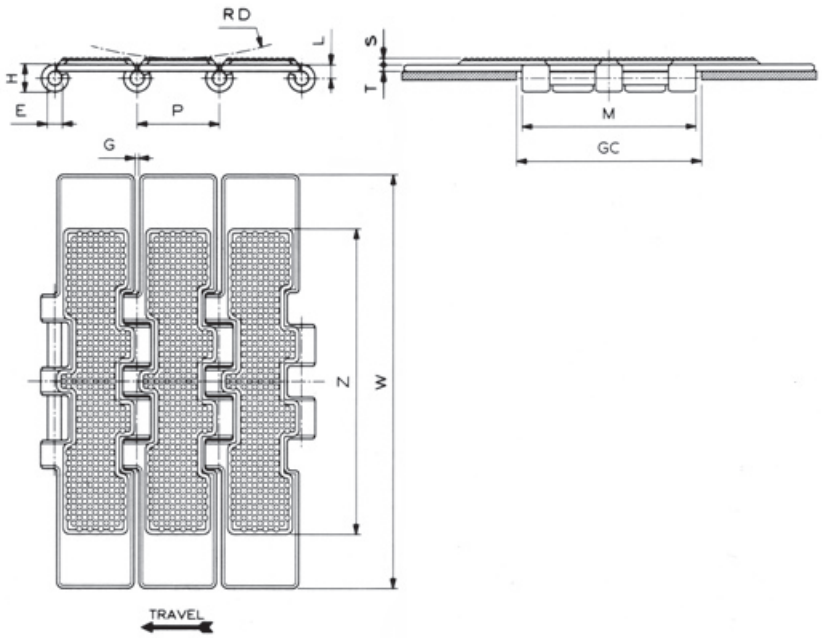

Dimension	mm	inches
P	38,1	1.5
T	3	.118
S	2,8	.11
M	80	3.15
L	6,4	.252
H	13	.512
E	6,35	.25
Z	140	5.512
RD	150	5.906
GC	82,5	3.248

Chain material see page 12
Sprockets and Idler wheels see pages 179÷183
Sprocket positioning see page 299

G 2815 (Straight Running - Double Hinge - Rubber Surface)

MATERIAL	REGINA REF.	CHAIN WIDTH W		GAP G		YIELD LOAD AVERAGE		CHAIN WEIGHT	
		mm	inches	mm	inches	N	lbs	kg/m	lbs/ft
PRIMA (P)	PG 2815 K 7 ½	190,5	7.50	1,8	0.071	15000	3,375	5,94	3.99

Standard length: 3,048 m (10 feet)

FliteTop®

STRAIGHT RUNNING CHAIN WITH RUBBER SURFACE

G 9157 SERIES - HEAVY DUTY 57 mm HINGE

- HD: Increased pin hardness for better resistance to chain elongation.

Reference	Standard Materials P
HDG 9157	

Pad Material: Nitrile rubber (see page 36).
Pin Material: Hardened martensitic stainless steel

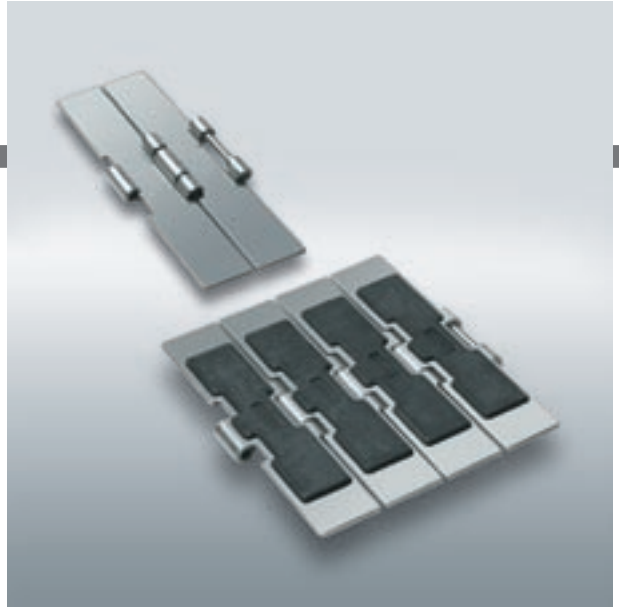

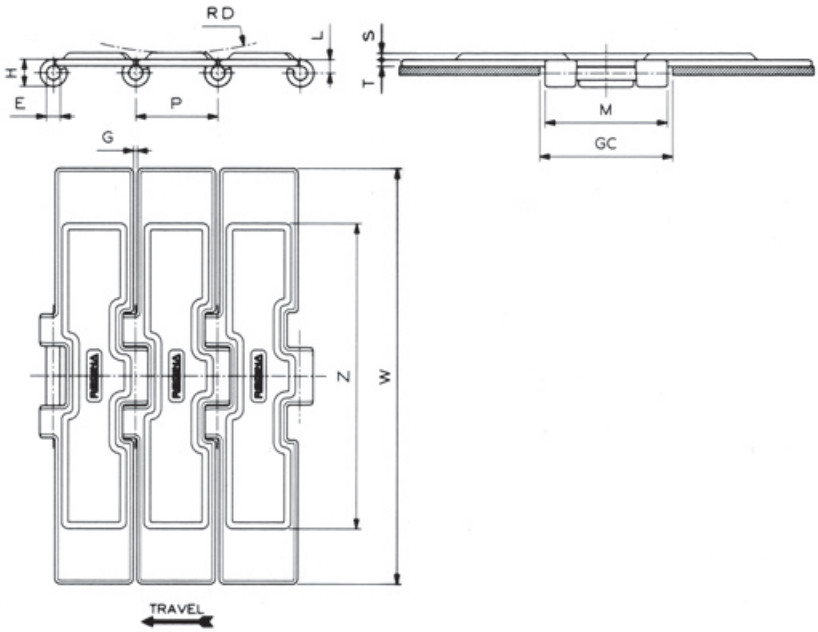

Dimension	mm	inches
P	38,1	1.5
T	3	.118
S	3	.118
M	57	2.244
L	6,4	.252
H	13	.512
E	6,35	.25
Z	140	5.512
RD	150	5.906
GC	60	2.362

Chain material see page 12
Sprockets and Idler wheels see pages 184÷185
Sprocket positioning see page 299

NEW

HDG 9157 (Straight Running - Heavy Duty 57 mm Hinge - Increased Pin Hardness - Rubber Surface)

MATERIAL	REGINA REF.	CHAIN WIDTH W		GAP G		YIELD LOAD AVERAGE		CHAIN WEIGHT	
		mm	inches	mm	inches	N	lbs	kg/m	lbs/ft
PRIMA (P)	PHDG 9157 K 7 ½	190,5	7.50	1,6	0.063	10500	2,363	5,60	3.76

Standard length: 3,048 m (10 feet)

FliteTop®

SIDEFLEXING CHAIN WITH RUBBER SURFACE

G 981 SERIES - BEVEL, REDUCED FLIGHT GAP

Reference	Standard Materials P
G 981	

Pad Material: Nitrile rubber (see page 36).
Pin Material: Cold rolled austenitic stainless steel.

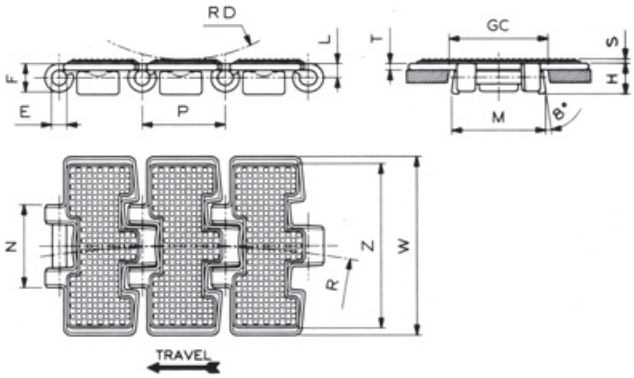

Dimension	mm	inches
P	38,1	1.5
T	3	.118
S	2	.079
M	43	1.693
N	38,3	1.508
L	6,4	.252
H	14,5	.571
E	6,35	.25
F	13	.512
Z	76	2.992
RD	75	2.953
GC (Straight)	44,5	1.752
GC (Curve)	44,5	1.634

Chain material see page 12
Sprockets and Idler wheels see pages 190÷195
Corner tracks see page 283
Sprocket positioning see page 299

G 981 (Sideflexing - Bevel - Rubber Surface)

MATERIAL	REGINA REF.	CHAIN WIDTH W		SIDEFLEXING RADIUS R		YIELD LOAD AVERAGE		CHAIN WEIGHT	
		mm	inches	mm	inches	N	lbs	kg/m	lbs/ft
PRIMA (P)	PG 981 K 3 ¼	82,6	3.25	457,2	18	8000	1,800	2,90	1.95

Standard length: 3,048 m (10 feet)

FliteTop®

SIDEFLEXING CHAIN WITH RUBBER SURFACE

G 981T SERIES - TAB, REDUCED FLIGHT GAP

Reference	Standard Materials P
G 981T	

Pad Material: Nitrile rubber (see page 36).
Pin Material: Cold rolled austenitic stainless steel

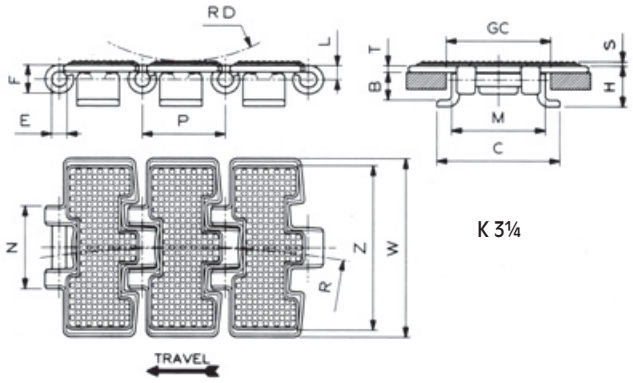

K 3¼

Dimension	mm	inches
P	38,1	1.5
T	3	.118
S	2	.079
M	43	1.693
N	38,3	1.508
C	56	2.205
L	6,4	.252
H	19,3	.760
E	6,35	.25
B	12,8	.504
F	13	.512
Z	76	2.992
RD	75	2.953
GC (Straight)	46	1.811
GC (Curve)	44,5	1.752

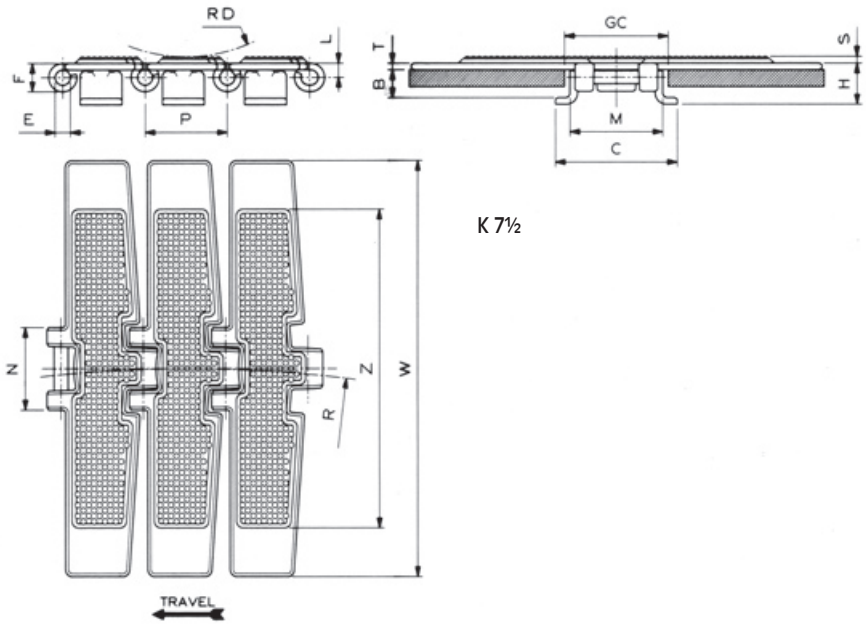

K 7½

Dimension	mm	inches
P	38,1	1.5
T	3	.118
S	2,8	.11
M	43	1.693
N	38,3	1.508
C	56	2.205
L	6,4	.252
H	19,3	.76
E	6,35	.25
B	12,8	.504
F	13	.512
Z	146	5.748
RD	75	2.953
GC (Straight)	46	1.811
GC (Curve)	44,5	1.752

Chain material see page 12
Sprockets and Idler wheels see pages 190÷195
Corner tracks see page 280
Sprocket positioning see page 299

G 981T (Sideflexing - Tab - Rubber Surface)

MATERIAL	REGINA REF.	CHAIN WIDTH W		SIDEFLEXING RADIUS R		YIELD LOAD AVERAGE		CHAIN WEIGHT	
		mm	inches	mm	inches	N	lbs	kg/m	lbs/ft
PRIMA (P)	PG 981T K 3 ¼	82,6	3.25	457,2	18	8000	1,800	3,07	2.06
	PG 981T K 7 ½	190,5	7.50	609,6	24	8000	1,800	5,30	3.56

Standard length: 3,048 m (10 feet)

FliteTop®

SIDEFLEXING CHAIN WITH RUBBER SURFACE

G 981M SERIES - MAGNETIC, REDUCED FLIGHT GAP

Reference	Standard Materials P
G 981M	

Pad Material: Nitrile rubber (see page 36).
Pin Material: Cold rolled austenitic stainless steel.

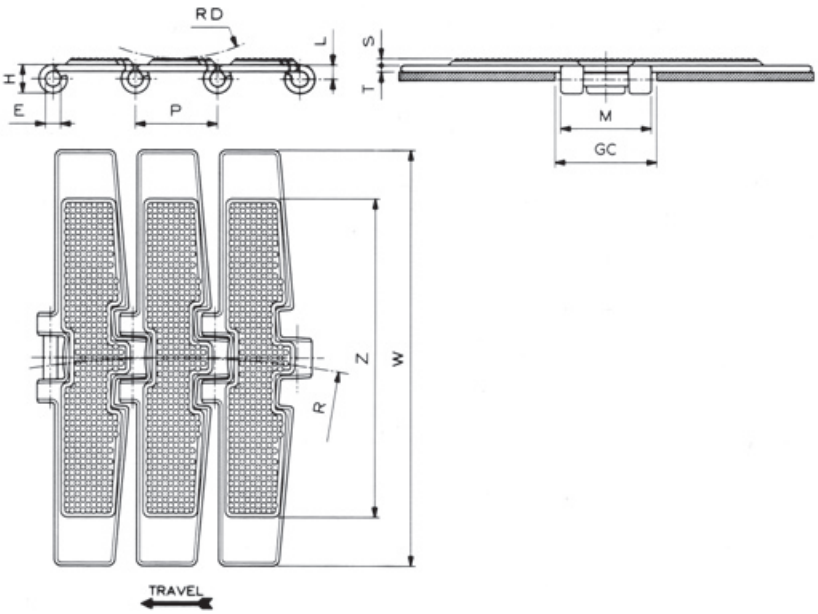

Dimension	mm	inches
P	38,1	1.5
T	3	.118
S	2,8	.11
M	42	1.654
L	6,4	.252
H	13	.512
E	6,35	.25
Z	146	5.748
RD	75	2.953
GC (Straight)	44	1.732
GC (Curve)	44	1.732

Chain material see page 12
Sprockets and Idler wheels see pages 172÷178
Corner tracks see page 241
Sprocket positioning see page 299

G 981M (Sideflexing - Magnetic - Rubber Surface)

MATERIAL	REGINA REF.	CHAIN WIDTH W		SIDEFLEXING RADIUS R		YIELD LOAD AVERAGE		CHAIN WEIGHT	
		mm	inches	mm	inches	N	lbs	kg/m	lbs/ft
PRIMA (P)	PG 981M K 7 ½	190,5	7.50	500	19.685	8500	1,913	4,77	3.21

Standard length: 3,048 m (10 feet)

FliteTop®

SIDEFLEXING CHAIN WITH RUBBER SURFACE

G 9857M SERIES - MAGNETIC, HEAVY DUTY 57 mm HINGE

- Brushed side hinge to reduce wear of magnetic curves.
- HD: Increased pin hardness for better resistance to chain elongation.

Reference	Standard Materials P
HDG 9857M	

Pad Material: Nitrile rubber (see page 36).
Pin Material: Hardened martensitic stainless steel

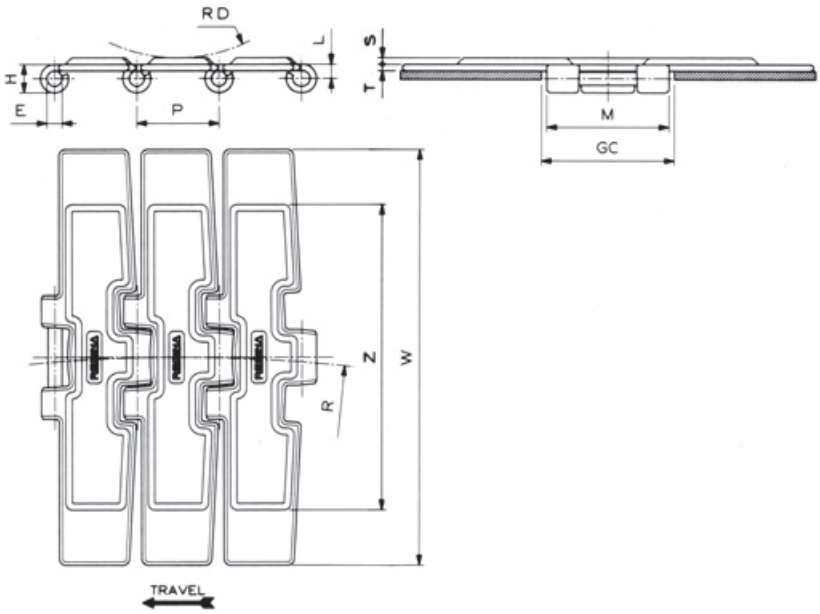

Dimension	mm	inches
P	38,1	1.5
T	3	.118
S	3	.118
M	57	2.244
L	6,4	.252
H	13	.512
E	6,35	.25
Z	140	5.512
RD	75	2.953
GC (Straight)	60	2.362
GC (Curve)	60	2.362

Chain material see page 12
Sprockets and Idler wheels see pages 184÷185
Corner tracks see page 241
Sprocket positioning see page 299

NEW

HDG 9857M (Sideflexing - Magnetic - Heavy Duty 57 mm Hinge - Increased Pin Hardness - Rubber Surface)

MATERIAL	REGINA REF.	CHAIN WIDTH W		SIDEFLEXING RADIUS R		YIELD LOAD AVERAGE		CHAIN WEIGHT	
		mm	inches	mm	inches	N	lbs	kg/m	lbs/ft
PRIMA (P)	**PHDG 9857M K 7 ½**	190,5	7.50	750	29.528	10500	2,363	5,26	3.53

Standard length: 3,048 m (10 feet)

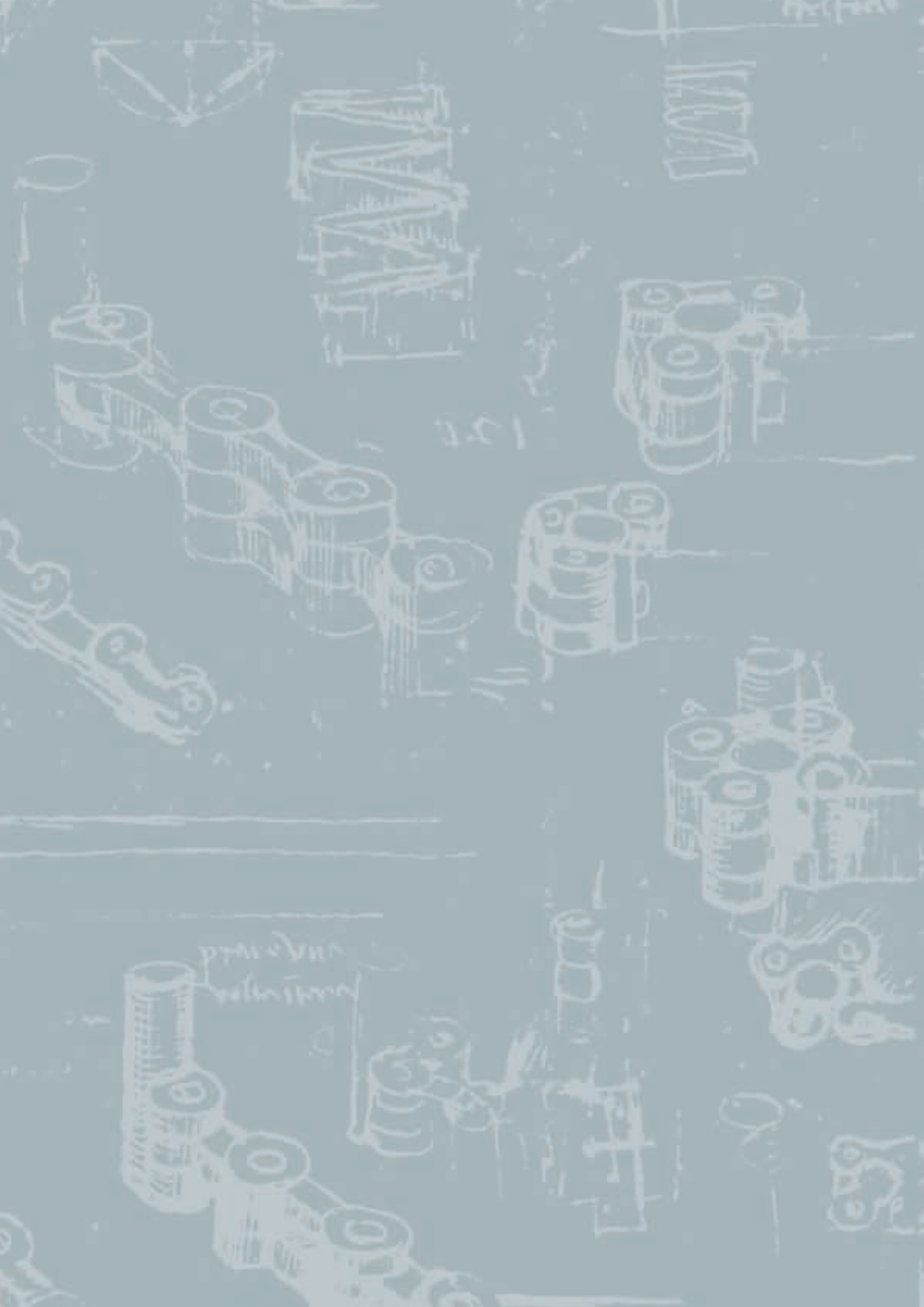

FliteTop®

Thermoplastic Chains

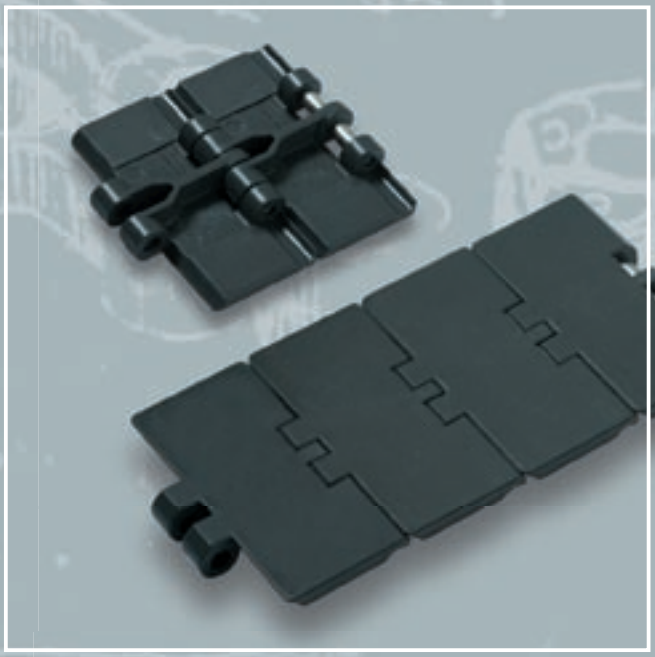

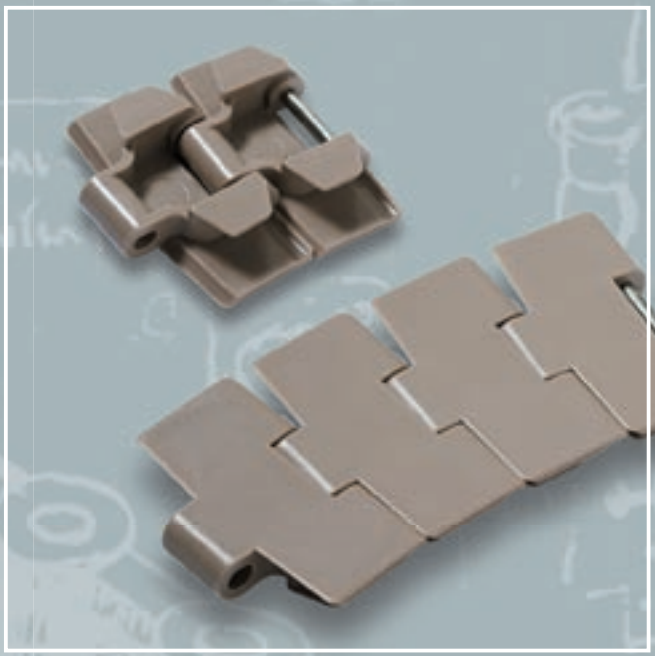

FliteTop®

THERMOPLASTIC CHAINS

APPLICATIONS:

- Pet bottle
- Pet petaloid bottle
- Aluminum and steel can
- Cartons
- Non Returnable glass
- Glass mfg
- Packaged products (cartons, shrink packs)
- Paper and cardboard
- General purpose conveyors

BENEFITS:

- DuPont™ Delrin® acetal resins give the maximum mechanical strength in the class and high wear resistance
- Accuracy of molding process guarantees optimum flatness
- Austenitic pin with high corrosion and wear resistance
- Availability of a complete range of straight running and sideflexing 83.8 mm wide chains, for gap reduction on 85mm pitch conveyors

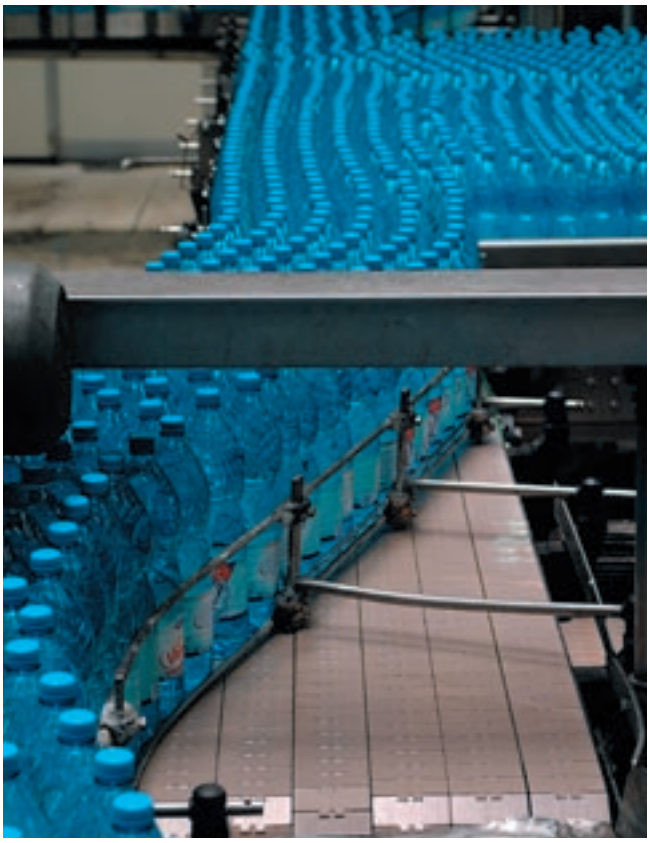

FliteTop®

DK (DuPont™ Delrin® with DuPont™ Kevlar®) CHAINS

APPLICATIONS:

- Glass manufacturing
  PET, aluminium can, glass bottle lines where good lubrication is not possible

BENEFITS:

- DK material has excellent wear resistance. Consequently, dusting on conveyors is very limited and chain life is longer
  Lower coefficient of friction = lower pressure on containers in the accumulation sections of conveyor
- High productivity of combiners

Wear test: New glass bottles in accumulation

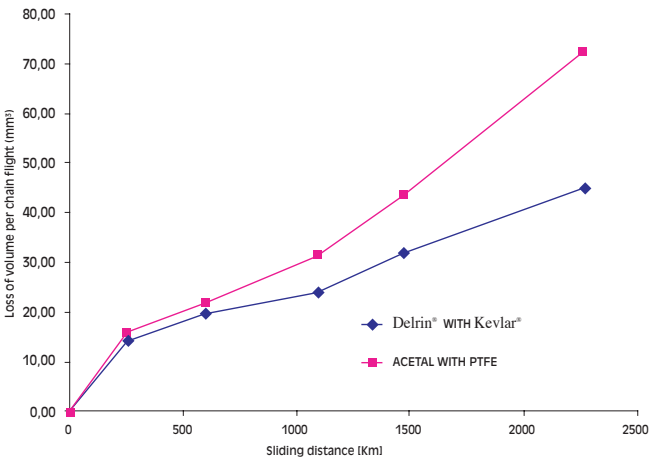

AR (ABRASION RESISTANT) CHAINS

APPLICATIONS (ONLY DRY RUNNING):

- Glass manufacturing
- Automotive/mechanical
- General purpose conveyors

BENEFITS:

- Dusting on conveyors is very limited
- Excellent wear resistance

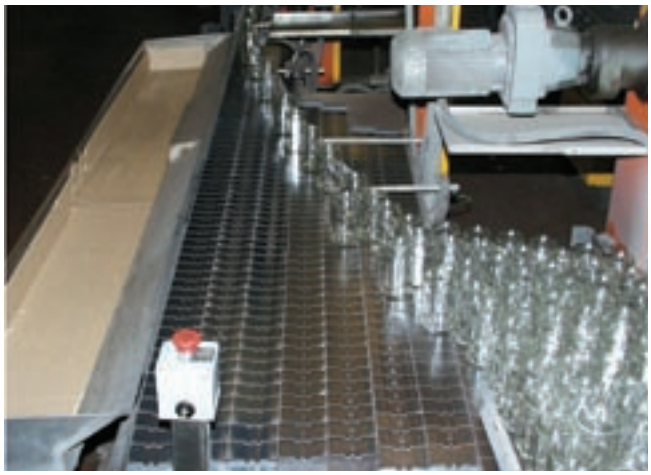

DuPont™ Delrin® and DuPont™ Kevlar® are registered trade marks of E.I. DuPont De Nemours and Associates

FliteTop®

STRAIGHT RUNNING CHAIN

820 SERIES

- 83.8 mm wide chains available: for gap reduction on 85 mm transversal pitch conveyors.

Reference	Standard Materials LW	UP	DK
820			

Pin Material: Cold rolled austenitic stainless steel.

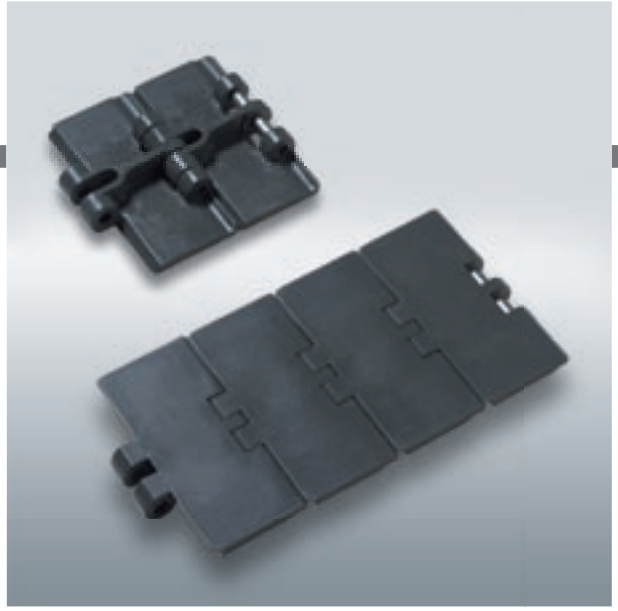

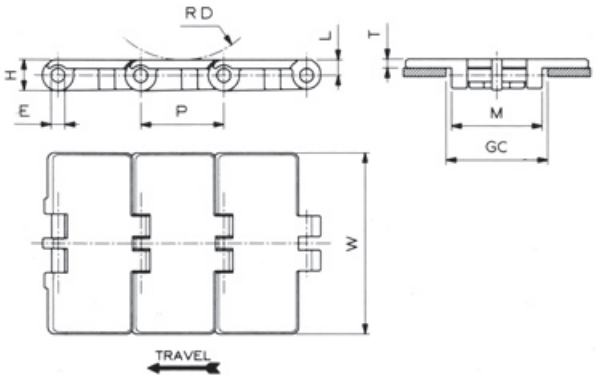

Dimension	mm	inches
P	38,1	1.5
M	41,6	1.638
L	7,2	.283
H	14,3	.563
E	6,35	.25
RD	40	1.575
GC	44	1.732

820 (Straight Running)

Chain material see page 12
Sprockets and Idler wheels see pages 196÷199
Sprocket positioning see page 299

MATERIAL	REGINA REF.	CHAIN WIDTH W		PLATE THICKNESS T		WORKING LOAD (25°C/77°F)		CHAIN WEIGHT	
		mm	inches	mm	inches	N	lbs	kg/m	lbs/ft
ACETAL RESIN (LW)	LW 820 K 3 ¼	82,6	3.25	4,0	0.157	1600	360	0,87	0.58
	LW 820 K 83,8	83,8	3.30	4,0	0.157	1600	360	0,88	0.59
	LW 820 K 87	87,0	3.43	4,0	0.157	1600	360	0,93	0.62
	LW 820 K 4	101,6	4.00	4,0	0.157	1600	360	0,95	0.64
	LW 820 K 4 ½	114,3	4.50	4,0	0.157	1600	360	1,03	0.69
	LW 820 K 6	152,4	6.00	4,0	0.157	1600	360	1,25	0.84
	LW 820 K 7 ½	190,5	7.50	4,0	0.157	1600	360	1,47	0.99
ULTRA PERFORMANCE ACETAL RESIN (UP)	UP 820 K 3 ¼	82,6	3.25	4,0	0.157	1600	360	0,87	0.58
	UP 820 K 83,8	83,8	3.30	4,0	0.157	1600	360	0,88	0.59
	UP 820 K 4	101,6	4.00	4,0	0.157	1600	360	0,95	0.64
	UP 820 K 4 ½	114,3	4.50	4,0	0.157	1600	360	1,03	0.69
	UP 820 K 6	152,4	6.00	4,0	0.157	1600	360	1,25	0.84
	UP 820 K 7 ½	190,5	7.50	4,0	0.157	1600	360	1,47	0.99
REGINA DK	DK 820 K 3 ¼	82,6	3.25	4,0	0.157	1600	360	0,87	0.58
	DK 820 K 83,8	83,8	3.30	4,0	0.157	1600	360	0,88	0.59
	DK 820 K 4 ½	114,3	4.50	4,0	0.157	1600	360	1,03	0.69

Standard length: 3,048 m (10 feet)

FliteTop®

STRAIGHT RUNNING CHAIN

820 SERIES

Reference	Standard Materials *P	*AR	AS
820			

Pin Material: Cold rolled austenitic stainless steel.
Chemical resistant light blue resin (for PP series).

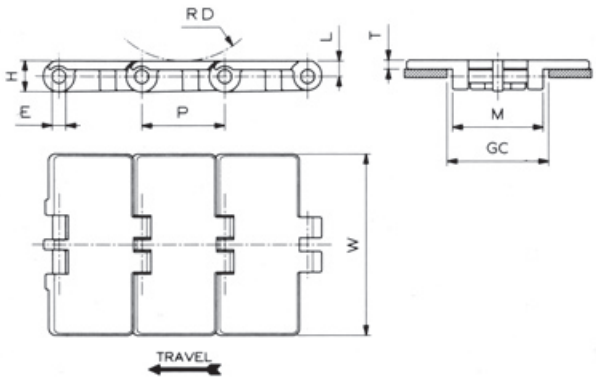

Dimension	mm	inches
P	38,1	1.5
M	41,6	1.638
L	7,2	.283
H	14,3	.563
E	6,35	.25
RD	40	1.575
GC	44	1.732

Chain material see page 12
Sprockets and Idler wheels see pages 196÷199
Sprocket positioning see page 299

820 (Straight Running)

MATERIAL	REGINA REF.	CHAIN WIDTH W mm	CHAIN WIDTH W inches	PLATE THICKNESS T mm	PLATE THICKNESS T inches	WORKING LOAD (25°C/77°F) N	WORKING LOAD (25°C/77°F) lbs	CHAIN WEIGHT kg/m	CHAIN WEIGHT lbs/ft
ABRASION RESISTANT RESIN* (AR)	AR 820 K 3 ¼	82,6	3.25	4,0	0.157	1300	293	0,84	0.56
	AR 820 K 4 ½	114,3	4.50	4,0	0.157	1300	293	1,02	0.69
ANTISTATIC RESIN (AS)	AS 820 K 3 ¼	82,6	3.25	4,0	0.157	1200	270	0,87	0.58
	AS 820 K 4 ½	114,3	4.50	4,0	0.157	1200	270	1,02	0.69
	AS 820 K 7 ½	190,5	7.50	4,0	0.157	1200	270	1,47	0.99
CHEMICAL RESISTANT RESIN* (P)	P 820 K 3 ¼	82,6	3.25	4,0	0.157	800	180	1,02	0.69
	P 820 K 4	101,6	4.00	4,0	0.157	800	180	1,15	0.77
	P 820 K 4 ½	114,3	4.50	4,0	0.157	800	180	1,21	0.81
	P 820 K 6	152,4	6.00	4,0	0.157	800	180	1,41	0.95
	P 820 K 7 ½	190,5	7.50	4,0	0.157	800	180	1,69	1.14
	PP 820 K 3 ¼	82,6	3.25	4,0	0.157	800	180	0,78	0.52
	PP 820 K 4	101,6	4.00	4,0	0.157	800	180	0,91	0.61
	PP 820 K 4 ½	114,3	4.50	4,0	0.157	800	180	0,98	0.66
	PP 820 K 6	152,4	6.00	4,0	0.157	800	180	1,17	0.79
	PP 820 K 7 ½	190,5	7.50	4,0	0.157	800	180	1,46	0.98

* Due to different shrinkage of materials, actual width is larger than the standard.

Standard length: 3,048 m (10 feet)

FliteTop®

STRAIGHT RUNNING CHAIN

831 SERIES - REINFORCED TOP PLATE

- Reinforced top plate thickness 4,8 mm.
- 83.8mm wide chains available: for gap reduction on 85 mm transversal pitch conveyors.

Reference	Standard Materials LW	UP	DK
831			

Pin Material: Cold rolled austenitic stainless steel.

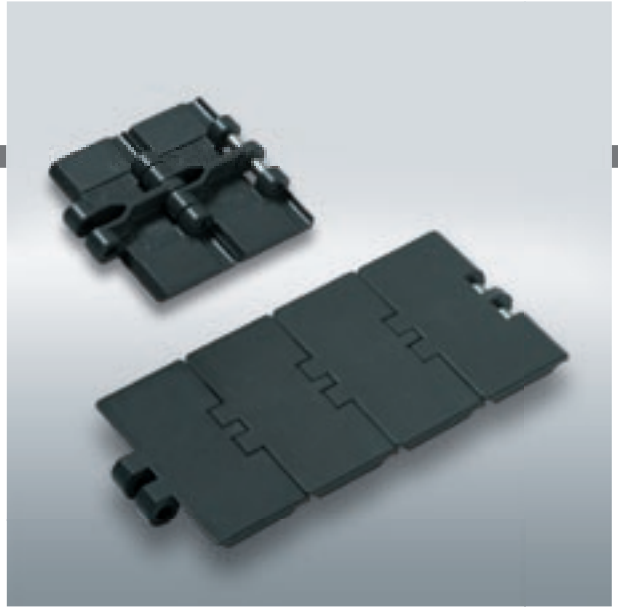

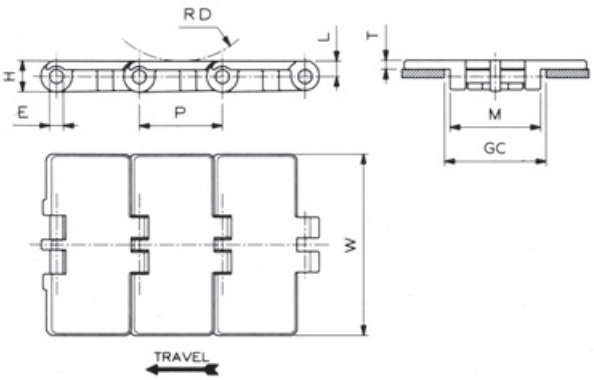

Dimension	mm	inches
P	38,1	1.5
M	41,6	1.638
L	7,2	.283
H	14,3	.563
E	6,35	.25
RD	40	1.575
GC	44	1.732

Chain material see page 12

Sprockets and Idler wheels see pages 196÷199

Sprocket positioning see page 299

831 (Straight Running - Reinforced Top Plate Thickness)

MATERIAL	REGINA REF.	CHAIN WIDTH W		PLATE THICKNESS T		WORKING LOAD (25°C/77°F)		CHAIN WEIGHT	
		mm	inches	mm	inches	N	lbs	kg/m	lbs/ft
ACETAL RESIN (LW)	LW 831 K 3 ¼	82,6	3.25	4,8	0.189	1600	360	0,90	0.60
	LW 831 K 83,8	83,8	3.30	4,8	0.189	1600	360	0,91	0.61
	LW 831 K 4 ½	114,3	4.50	4,8	0.189	1600	360	1,09	0.73
	LW 831 K 7 ½	190,5	7.50	4,8	0.189	1600	360	1,51	1.01
ULTRA PERFORMANCE ACETAL RESIN (UP)	UP 831 K 3 ¼	82,6	3.25	4,8	0.189	1600	360	0,90	0.60
	UP 831 K 83,8	83,8	3.30	4,8	0.189	1600	360	0,91	0.61
	UP 831 K 4 ½	114,3	4.50	4,8	0.189	1600	360	1,09	0.73
	UP 831 K 7 ½	190,5	7.50	4,8	0.189	1600	360	1,51	1.01
REGINA DK	DK 831 K 3 ¼	82,6	3.25	4,8	0.189	1600	360	0,90	0.60
	DK 831 K 83,8	83,8	3.30	4,8	0.189	1600	360	0,91	0.61
	DK 831 K 4 ½	114,3	4.50	4,8	0.189	1600	360	1,09	0.73

Standard length: 3,048 m (10 feet)

FliteTop®

STRAIGHT RUNNING CHAIN

821 SERIES - DOUBLE HINGE, REINFORCED

- Top plate thickness 4,8 mm.

Reference	Standard Materials LW	UP	DK
821			

Pin Material: Cold rolled austenitic stainless steel.

on request

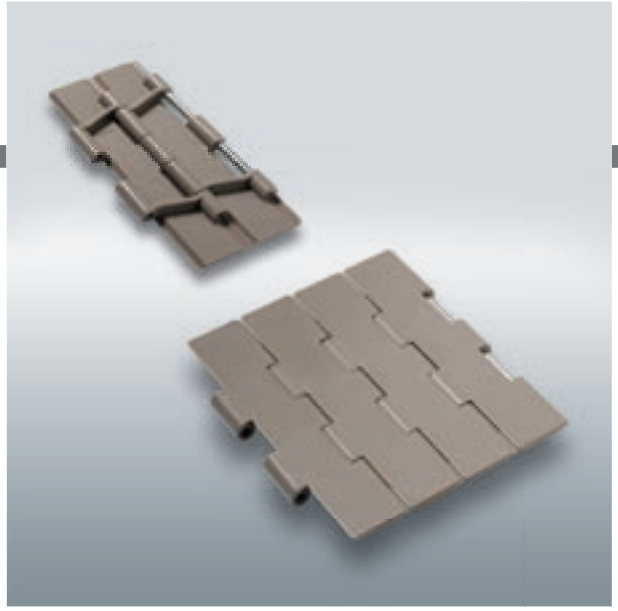

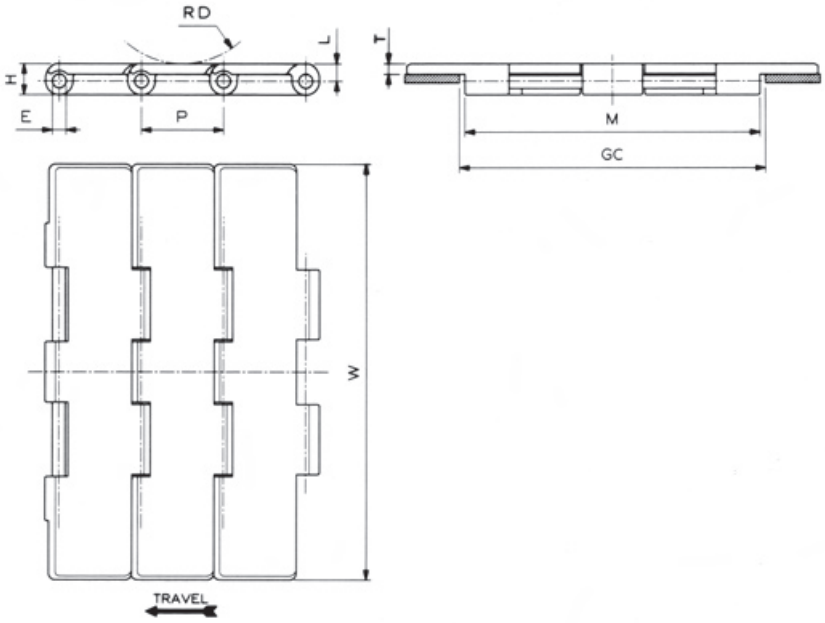

Dimension	mm	inches
P	38,1	1.5
M	136,5	5.374
L	8	.315
H	14,3	.563
E	6,35	.25
RD	40	1.575
GC	140	5.512

Chain material see page 12

Sprockets and Idler wheels see pages 200÷201

Sprocket positioning see page 299

821 (Straight Running - Reinforced Top Plate Thickness - Double Hinge)

MATERIAL	REGINA REF.	CHAIN WIDTH W		PLATE THICKNESS T		WORKING LOAD (25°C/77°F)		CHAIN WEIGHT	
		mm	inches	mm	inches	N	lbs	kg/m	lbs/ft
ACETAL RESIN (LW)	LW 821 K 7 ½	190,5	7.50	4,8	0.189	2750	619	2,46	1.65
	LW 821 K 10	254,0	10.00	4,8	0.189	2750	619	2,98	2.00
	LW 821 K 12	304,8	12.00	4,8	0.189	2750	619	3,34	2.24
ULTRA PERFORMANCE ACETAL RESIN (UP)	UP 821 K 7 ½	190,5	7.50	4,8	0.189	2750	619	2,46	1.65
	UP 821 K 10	254,0	10.00	4,8	0.189	2750	619	2,98	2.00
	UP 821 K 12	304,8	12.00	4,8	0.189	2750	619	3,34	2.24

Standard length: 3,048 m (10 feet)

FliteTop®

SIDEFLEXING CHAIN

880 SERIES - BEVEL

Reference	Standard Materials LW	UP	*AR
880			

Pin Material: Cold rolled austenitic stainless steel.

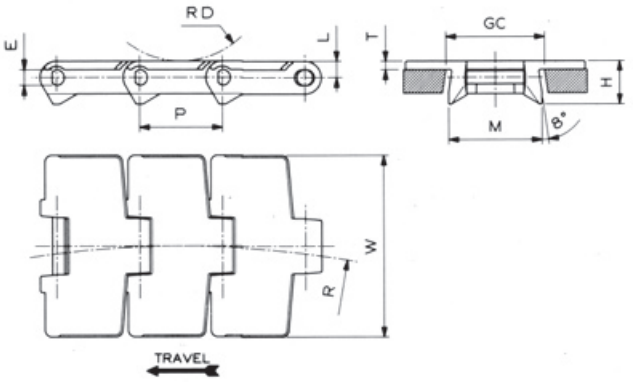

Dimension	mm	inches
P	38,1	1.5
M	43	1.693
L	7,6	.299
H	19,9	.783
E	7,05	.278
RD	40	1.575
GC (Straight)	44,5	1.752
GC (Curve)	41,5	1.634

880 (Sideflexing - Bevel)

Chain material see page 12
Sprockets and Idler wheels see pages 202÷205
Corner tracks see page 283
Sprocket positioning see page 299

MATERIAL	REGINA REF.	CHAIN WIDTH W		PLATE THICKNESS T		SIDEFLEXING RADIUS R		WORKING LOAD (25°C/77°F)		CHAIN WEIGHT	
		mm	inches	mm	inches	mm	inches	N	lbs	kg/m	lbs/ft
ACETAL RESIN (LW)	**LW 880 K 3 ¼**	82,6	3.25	4,0	0.157	457,2	18	2000	450	0,89	0.60
	LW 880 K 4 ½	114,3	4.50	4,0	0.157	609,6	24	2000	450	1,04	0.70
ULTRA PERFORMANCE ACETAL RESIN (UP)	**UP 880 K 3 ¼**	82,6	3.25	4,0	0.157	457,2	18	2000	450	0,89	0.60
	UP 880 K 4 ½	114,3	4.50	4,0	0.157	609,6	24	2000	450	1,04	0.70
ABRASION RESISTANT RESIN* (AR)	**AR 880 K 3 ¼**	82,6	3.25	4,0	0.157	457,2	18	1600	360	0,79	0.53
	AR 880 K 4 ½	114,3	4.50	4,0	0.157	609,6	24	1600	360	0,89	0.60

* Due to different shrinkage of materials, actual width is larger than the standard.

Standard length: 3,048 m (10 feet

FliteTop®

SIDEFLEXING CHAIN

879 SERIES - BEVEL, REINFORCED

- Top plate thickness 4,8 mm

Reference	Standard Materials LW	UP
879		

Pin Material: Cold rolled austenitic stainless steel.

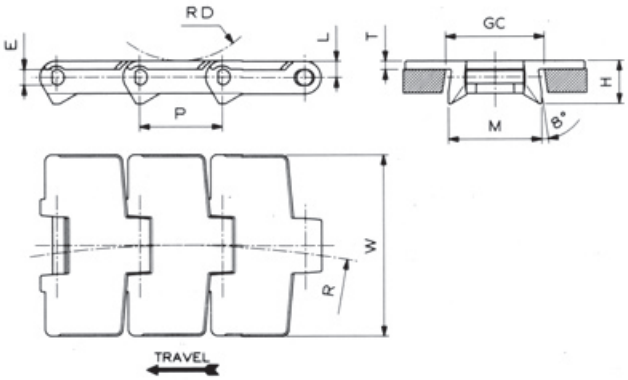

Dimension	mm	inches
P	38,1	1.5
M	43	1.693
L	7,6	.299
H	19,9	.783
E	7,05	.278
RD	40	1.575
GC (Straight)	44,5	1.752
GC (Curve)	41,5	1.634

Chain material see page 12
Sprockets and Idler wheels see pages 202÷205
Corner tracks see page 283
Sprocket positioning see page 299

879 (Sideflexing - Reinforced Top Plate Thickness - Bevel)

MATERIAL	REGINA REF.	CHAIN WIDTH W		PLATE THICKNESS T		SIDEFLEXING RADIUS R		WORKING LOAD (25°C/77°F)		CHAIN WEIGHT	
		mm	inches	mm	inches	mm	inches	N	lbs	kg/m	lbs/ft
ACETAL RESIN (LW)	LW 879 K 3 ¼	82,6	3.25	4,8	0.189	457,2	18	2000	450	0,96	0.65
	LW 879 K 4 ½	114,3	4.50	4,8	0.189	609,6	24	2000	450	1,11	0.75
ULTRA PERFORMANCE ACETAL RESIN (UP)	UP 879 K 3 ¼	82,6	3.25	4,8	0.189	457,2	18	2000	450	0,96	0.65
	UP 879 K 4 ½	114,3	4.50	4,8	0.189	609,6	24	2000	450	1,11	0.75

Standard length: 3,048 m (10 feet)

FliteTop®

SIDEFLEXING CHAIN

880T SERIES - TAB

- 83.8 mm wide chains available: for gap reduction on 85 mm transversal pitch conveyors.

Reference	Standard Materials LW	UP	DK	*AR	AS	*P
880T						

Pin Material: Cold rolled austenitic stainless steel.

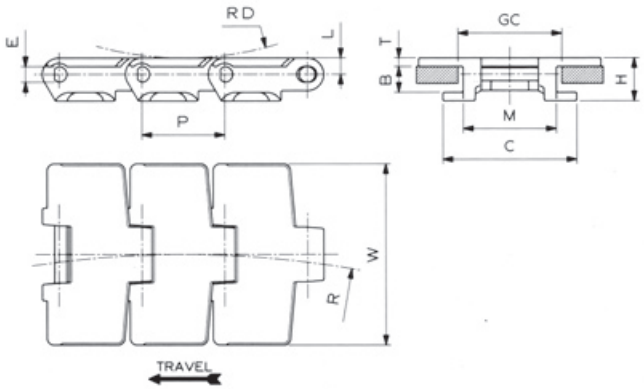

Dimension	mm	inches
P	38,1	1.5
M	42,9	1.689
C	62	2.441
L	7,6	.299
H	19,9	.783
E	7,05	.278
B	11,9	.469
RD	40	1.575
GC (Straight)	46	1.811
GC (Curve)	44,5	1.752

880T (Sideflexing - Tab)

Chain material see page 12
Sprockets and Idler wheels see pages 202÷205
Corner tracks see page 280
Sprocket positioning see page 299

MATERIAL	REGINA REF.	CHAIN WIDTH W mm	inches	PLATE THICKNESS T mm	inches	SIDEFLEXING RADIUS R mm	inches	WORKING LOAD (25°C/77°F) N	lbs	CHAIN WEIGHT kg/m	lbs/ft
ACETAL RESIN (LW)	LW 880T K 3 ¼	82,6	3.25	4,0	0.157	457,2	18	2000	450	1,05	0.71
	LW 880T K 83,8	83,8	3.30	4,0	0.157	457,2	18	2000	450	1,06	0.71
	LW 880T K 87	87,0	3.43	4,0	0.157	457,2	18	2000	450	1,11	0.75
	LW 880T K 4 ½	114,3	4.50	4,0	0.157	609,6	24	2000	450	1,24	0.83
ULTRA PERFORMANCE ACETAL RESIN (UP)	UP 880T K 3 ¼	82,6	3.25	4,0	0.157	457,2	18	2000	450	1,05	0.71
	UP 880T K 83,8	83,8	3.30	4,0	0.157	457,2	18	2000	450	1,06	0.71
	UP 880T K 4 ½	114,3	4.50	4,0	0.157	609,6	24	2000	450	1,24	0.83
REGINA DK	DK 880T K 3 ¼	82,6	3.25	4,0	0.157	457,2	18	2000	450	1,05	0.71
	DK 880T K 83,8	83,8	3.30	4,0	0.157	457,2	18	2000	450	1,06	0.71
	DK 880T K 4 ½	114,3	4.50	4,0	0.157	609,6	24	2000	450	1,24	0.83
ABRASION RESISTANT RESIN* (AR)	AR 880T K 3 ¼	82,6	3.25	4,0	0.157	457,2	18	1600	360	0,89	0.60
	AR 880T K 4 ½	114,3	4.50	4,0	0.157	609,6	24	1600	360	1,02	0.69
ANTISTATIC RESIN (AS)	AS 880T K 3 ¼	82,6	3.25	4,0	0.157	457,2	18	1700	383	1,05	0.71
	AS 880T K 4 ½	114,3	4.50	4,0	0.157	609,6	24	1700	383	1,09	0.73
CHEMICAL RESISTANT RESIN* (P)	P 880T K 3 ¼	82,6	3.25	4,0	0.157	457,2	18	1100	248	1,28	0.86
	P 880T K 4 ½	114,3	4.50	4,0	0.157	609,6	24	1100	248	1,47	0.99

* Due to different shrinkage of materials, actual width is larger than the standard.

Standard length: 3,048 m (10 feet)

FliteTop®

SIDEFLEXING CHAIN

879T SERIES - TAB, REINFORCED

- Top plate thickness 4,8 mm
- 83.8 mm wide chains available: for gap reduction on 85 mm transversal pitch conveyors.

Reference	Standard Materials LW	UP	DK
879T			

Pin Material: Cold rolled austenitic stainless steel.

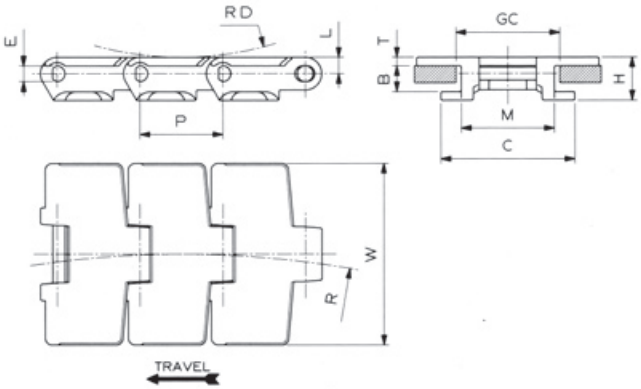

Dimension	mm	inches
P	38,1	1.5
M	42,9	1.689
C	62	2.441
L	7,6	.299
H	19,9	.783
E	7,05	.278
B	11,9	.469
RD	40	1.575
GC (Straight)	46	1.811
GC (Curve)	44,5	1.752

Chain material see page 12
Sprockets and Idler wheels see pages 202÷205
Corner tracks see page 280
Sprocket positioning see page 299

879T (Sideflexing - Reinforced Top Plate Thickness - Tab)

MATERIAL	REGINA REF.	CHAIN WIDTH W		PLATE THICKNESS T		SIDEFLEXING RADIUS R		WORKING LOAD (25°C/77°F)		CHAIN WEIGHT	
		mm	inches	mm	inches	mm	inches	N	lbs	kg/m	lbs/ft
ACETAL RESIN (LW)	LW 879T K 3 ¼	82,6	3.25	4,8	0.189	457,2	18	2000	450	1,07	0.72
	LW 879T K 83,8	83,8	3.30	4,8	0.189	457,2	18	2000	450	1,08	0.73
	LW 879T K 4 ½	114,3	4.50	4,8	0.189	609,6	24	2000	450	1,28	0.86
ULTRA PERFORMANCE ACETAL RESIN (UP)	UP 879T K 3 ¼	82,6	3.25	4,8	0.189	457,2	18	2000	450	1,07	0.72
	UP 879T K 83,8	83,8	3.30	4,8	0.189	457,2	18	2000	450	1,08	0.73
	UP 879T K 4 ½	114,3	4.50	4,8	0.189	609,6	24	2000	450	1,28	0.86
REGINA DK	DK 879T K 3 ¼	82,6	3.25	4,8	0.189	457,2	18	2000	450	1,07	0.72
	DK 879T K 83,8	83,8	3.30	4,8	0.189	457,2	18	2000	450	1,08	0.73
	DK 879T K 4 ½	114,3	4.50	4,8	0.189	609,6	24	2000	450	1,28	0.86

Standard length: 3,048 m (10 feet)

FliteTop®

SIDEFLEXING CHAIN

880M SERIES - MAGNETIC

- 83.8 mm wide chains available: for gap reduction on 85 mm transversal pitch conveyors.

Reference	Standard Materials LW	UP	DK
880M			

Pin Material: Magnetic stainless steel.

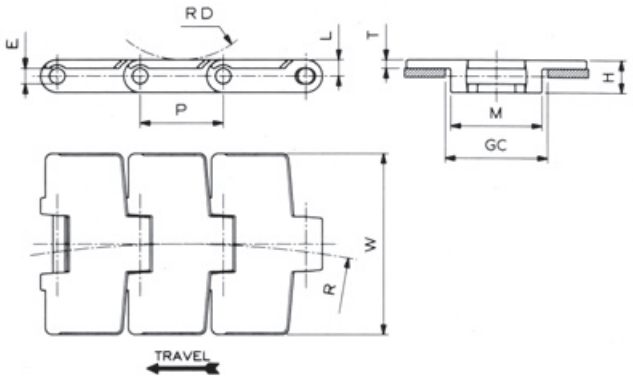

Dimension	mm	inches
P	38,1	1.5
M	42	1.654
L	7,6	.299
H	15,1	.594
E	7,1	.28
RD	40	1.575
GC (Straight)	44	1.732
GC (Curve)	44	1.732

880M (Sideflexing - Magnetic)

Chain material see page 12

Sprockets and Idler wheels see pages 202÷205

Corner tracks see page 241

Sprocket positioning see page 299

MATERIAL	REGINA REF.	CHAIN WIDTH W		PLATE THICKNESS T		SIDEFLEXING RADIUS R		WORKING LOAD (25°C/77°F)		CHAIN WEIGHT	
		mm	inches	mm	inches	mm	inches	N	lbs	kg/m	lbs/ft
ACETAL RESIN (LW)	LW 880M K 3 ¼	82,6	3.25	4,0	0.157	500	19.685	2000	450	0,97	0.65
	LW 880M K 83,8	83,8	3.30	4,0	0.157	500	19.685	2000	450	0,98	0.66
ULTRA PERFORMANCE ACETAL RESIN (UP)	UP 880M K 3 ¼	82,6	3.25	4,0	0.157	500	19.685	2000	450	0,97	0.65
	UP 880M K 83,8	83,8	3.30	4,0	0.157	500	19.685	2000	450	0,98	0.66
REGINA DK	DK 880M K 3 ¼	82,6	3.25	4,0	0.157	500	19.685	2000	450	0,97	0.65
	DK 880M K 83,8	83,8	3.30	4,0	0.157	500	19.685	2000	450	0,98	0.66

Standard length: 3,048 m (10 feet)

FliteTop®

SIDEFLEXING CHAIN

882 SERIES - BEVEL, HEAVY DUTY 57 mm HINGE

- Reinforced top plate thickness 4,8 mm.

Reference	Standard Materials LW
882	

Pin Material: Cold rolled austenitic stainless steel.

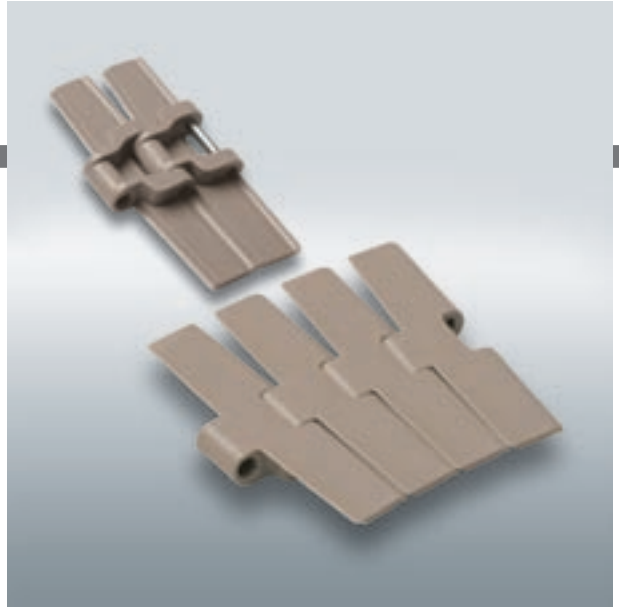

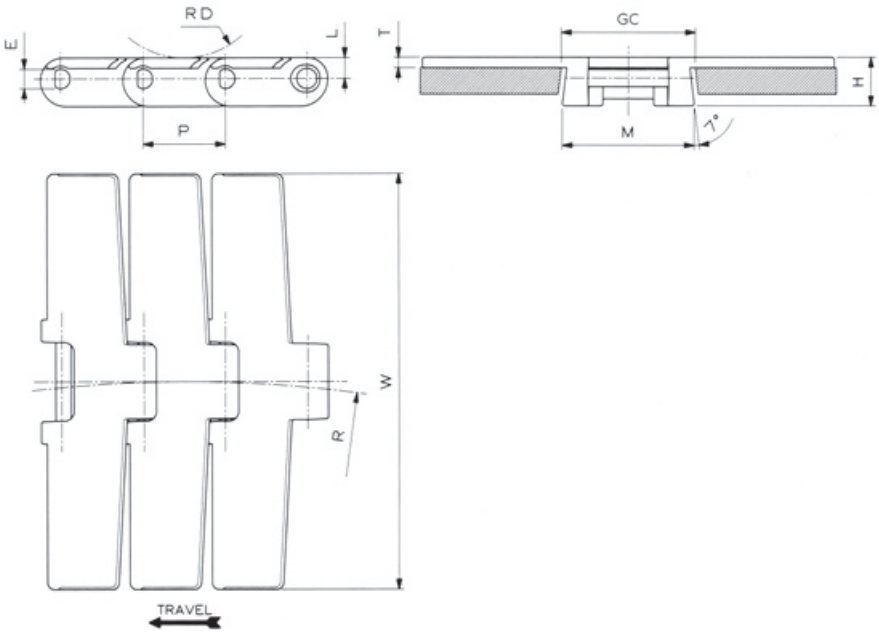

Dimension	mm	inches
P	38,1	1.5
M	57	2.244
L	9,5	.374
H	22,2	.874
E	8,7	.343
RD	40	1.575
GC (Straight)	60	2.362
GC (Curve)	60	2.362

Chain material see page 12
Sprockets and Idler wheels see pages 206÷209
Corner tracks see pages 283÷284
Sprocket positioning see page 299

882 (Sideflexing - Reinforced Top Plate Thickness - Heavy Duty 57 mm Hinge - Bevel)

MATERIAL	REGINA REF.	CHAIN WIDTH W		PLATE THICKNESS T		SIDEFLEXING RADIUS R		WORKING LOAD (25°C/77°F)		CHAIN WEIGHT	
		mm	inches	mm	inches	mm	inches	N	lbs	kg/m	lbs/ft
ACETAL RESIN (LW)	LW 882 K 4 ½	114,3	4.50	4,8	0.189	609,6	24	2800	630	1,92	1.29
	LW 882 K 7 ½	190,5	7.50	4,8	0.189	609,6	24	2800	630	2,32	1.56
	LW 882 K 10	254,0	10.00	4,8	0.189	609,6	24	2800	630	2,62	1.76
	LW 882 K 12	304,8	12.00	4,8	0.189	609,6	24	2800	630	2,85	1.91

Standard length: 3,048 m (10 feet)

FliteTop®

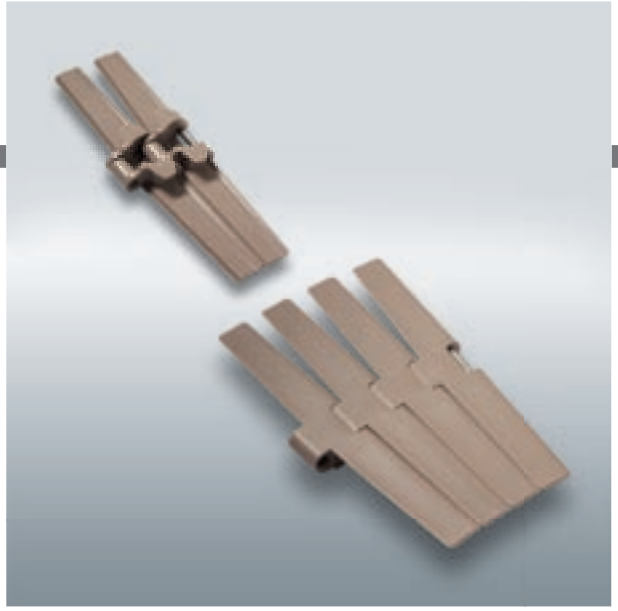

SIDEFLEXING CHAIN

882T SERIES - TAB, HEAVY DUTY 57 mm HINGE

- Reinforced top plate thickness 4,8 mm.

Reference	Standard Materials LW	UP	DK
882T			

Pin Material: Cold rolled austenitic stainless steel. on request

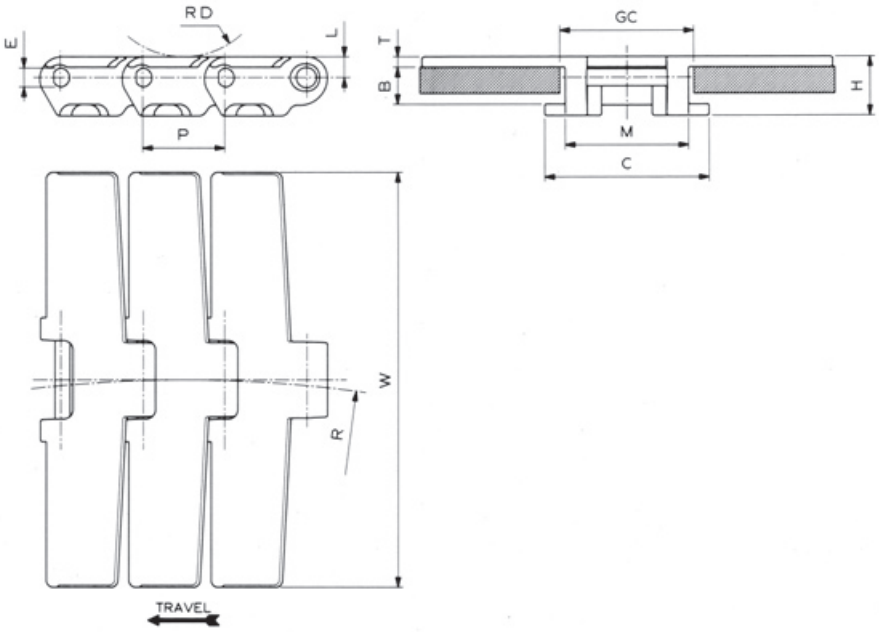

Dimension	mm	inches
P	38,1	1.5
M	57	2.244
C	76	2.992
L	9,5	.374
H	27,1	1.067
E	8,7	.343
B	17	.669
RD	40	1.575
GC (Straight)	60	2.362
GC (Curve)	60	2.362

Chain material see page 12
Sprockets and Idler wheels see pages 206÷209
Corner tracks see pages 280÷281
Sprocket positioning see page 299

882T (Sideflexing - Reinforced Top Plate Thickness - Heavy Duty 57 mm Hinge - Tab)

MATERIAL	REGINA REF.	CHAIN WIDTH W		PLATE THICKNESS T		SIDEFLEXING RADIUS R		WORKING LOAD (25°C/77°F)		CHAIN WEIGHT	
		mm	inches	mm	inches	mm	inches	N	lbs	kg/m	lbs/ft
ACETAL RESIN (LW)	LW 882T K 4 ½	114,3	4.50	4,8	0.189	609,6	24	2800	630	2,00	1.34
	LW 882T K 7 ½	190,5	7.50	4,8	0.189	609,6	24	2800	630	2,43	1.63
	LW 882T K 10	254,0	10.00	4,8	0.189	609,6	24	2800	630	2,72	1.83
	LW 882T K 12	304,8	12.00	4,8	0.189	609,6	24	2800	630	2,95	1.98
ULTRA PERFORMANCE ACETAL RESIN (UP)	UP 882T K 4 ½	114,3	4.50	4,8	0.189	609,6	24	2800	630	2,00	1.34
	UP 882T K 7 ½	190,5	7.50	4,8	0.189	609,6	24	2800	630	2,43	1.63
	UP 882T K 10	254,0	10.00	4,8	0.189	609,6	24	2800	630	2,72	1.83
	UP 882T K 12	304,8	12.00	4,8	0.189	609,6	24	2800	630	2,95	1.98

Standard length: 3,048 m (10 feet)

FliteTop®

SIDEFLEXING CHAIN

878T SERIES - TAB, REDUCED SIDEFLEXING RADIUS (200 mm)

- Reinforced top plate thickness 4,8 mm
- Suitable for use with turning discs (ref: CMA 09 878).

Reference	Standard Materials LW	*AR	UP	DK	AS
878T					
Pin Material: Cold rolled austenitic stainless steel.			on request	on request	on request

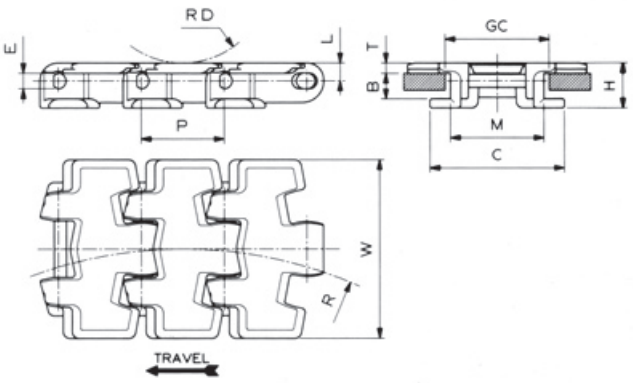

Dimension	mm	inches
P	38,1	1.5
M	42,9	1.689
C	61,8	2.433
L	8,3	.327
H	20,8	.819
E	7,05	.278
B	11,9	.469
RD	40	1.575
GC (Straight)	46	1.811
GC (Curve)	44,5	1.752

Chain material see page 12

Sprockets and Idler wheels see pages 202÷205

Sprocket positioning see page 299

878T (Sideflexing - Reinforced Top Plate Thickness - Tab - Reduced sideflexing radius)

MATERIAL	REGINA REF.	CHAIN WIDTH W		PLATE THICKNESS T		SIDEFLEXING RADIUS R		WORKING LOAD (25°C/77°F)		CHAIN WEIGHT	
		mm	inches	mm	inches	mm	inches	N	lbs	kg/m	lbs/ft
ACETAL RESIN (LW)	**LW 878T K 3 ¼**	82,6	3.25	4,8	0.189	200	7.874	2000	450	0,89	0.60
ABRASION RESISTANT RESIN* (AR)	**AR 878T K 3 ¼**	82,6	3.25	4,8	0.189	200	7.874	1600	360	0,89	0.60

* Due to different shrinkage of materials, actual width is larger than the standard.

Standard length: 3,048 m (10 feet)

FliteTop®

SIDEFLEXING CHAIN

880TA SERIES - TAB, PLATE WITH HOLE

- For vacuum conveyors.

Reference	Standard Materials LW
880TA	

Pin Material: Cold rolled austenitic stainless steel.

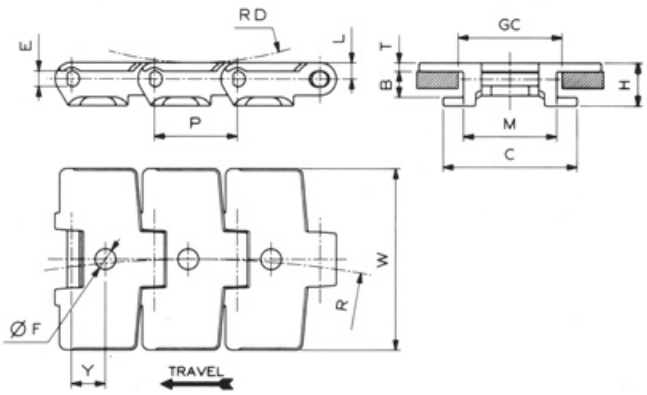

Dimension	mm	inches
P	38,1	1.5
M	42,9	1.689
C	62	2.441
L	7,6	.299
H	19,9	.783
E	7,05	.278
B	11,9	.469
F	9,5	.374
Y	15,6	.614
RD	40	1.575
GC (Straight)	46	1.811
GC (Curve)	44,5	1.752

Chain material see page 12
Sprockets and Idler wheels see pages 202÷205
Corner tracks see page 280
Sprocket positioning see page 299

880TA (Sideflexing - Tab - Vacuum)

MATERIAL	REGINA REF.	CHAIN WIDTH W		PLATE THICKNESS T		SIDEFLEXING RADIUS R		WORKING LOAD (25°C/77°F)		CHAIN WEIGHT	
		mm	inches	mm	inches	mm	inches	N	lbs	kg/m	lbs/ft
ACETAL RESIN (LW)	**LW 880TA K 3 ¼**	82,6	3.25	4,0	0.157	457,2	18	2000	450	0,91	0.61

Standard length: 3,048 m (10 feet)

FliteTop®

Rubber Surface Thermoplastic Chains

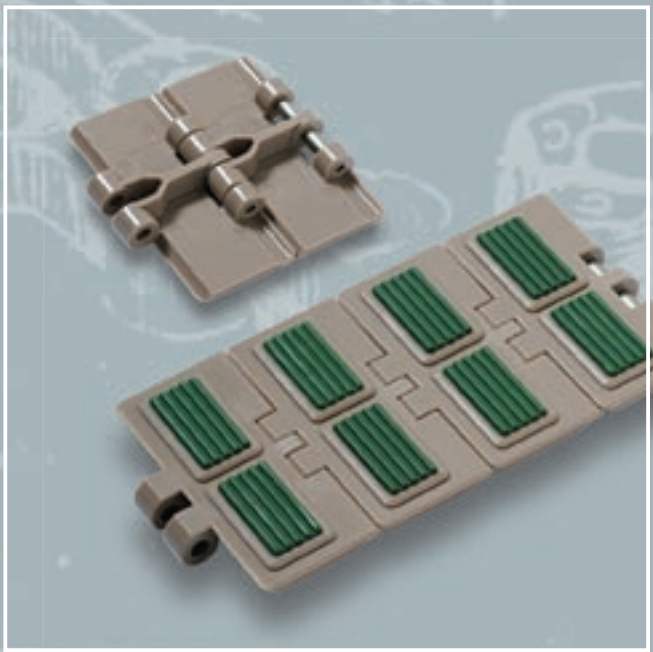

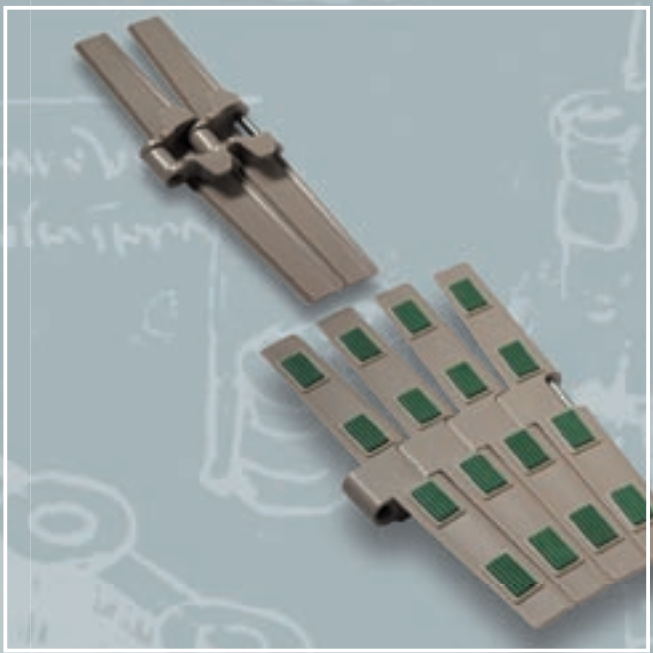

FliteTop®

THERMOPLASTIC CHAINS WITH RUBBER SURFACE

APPLICATIONS:

- Thermoplastic Chains with Rubber Surface
- Conveying of plastic crates on inclined conveyors

BENEFITS:

- The HF series chains are manufactured in special light brown acetal resin (LW) with friction pads securely bonded on the top surface by means of an ultrasonic welding process. All of the excellent characteristics of standard FliteTop thermoplastic LW chains are maintained: high mechanical strength, low friction carrying and return surface on wear strips and curves, same dimensional configuration as our standard series FliteTop chains for conveyor trackways.

- The maximum angle of the ramp is a function of type, shape and material of the product to be conveyed. Please contact Regina Application Engineers for a more detailed evaluation.

Rubber Standard Material

RUBBER MATERIAL	COLOUR	AVERAGE HARDNESS	MIN TEMPERATURE		MAX TEMPERATURE		NON SUITABLE WITH	RESISTANT TO
			C°	F	C°	F		
THERMOPLASTIC	GREEN	80 ShA	-40	-40	+80	+176	STRONG ACID AND BASES	OILS

* Please note that the maximum working temperature of the plastic flight is +65° (+149°F)

On request UF chains: thermoplastic flights with black ultra friction pads (59 ShA).

FliteTop®

STRAIGHT RUNNING CHAIN WITH RUBBER SURFACE

HF 820 SERIES

Reference	Standard Materials LW
HF 820	

Pad Material: Thermoplastic rubber (see page 62).
Pin Material: Cold rolled austenitic stainless steel.

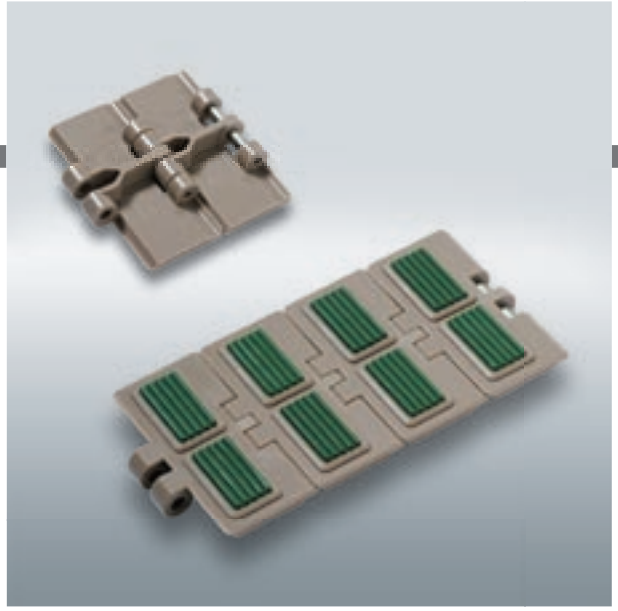

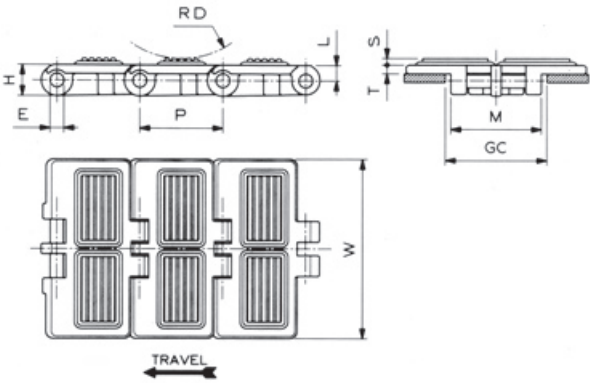

Dimension	mm	inches
P	38,1	1.5
M	41,6	1.638
L	7,2	.283
H	14,3	.563
E	6,35	.25
S	3	.118
V	16	.63
Z	30	1.181
RD	40	1.575
GC	44	1.732

Rubber pads positioning

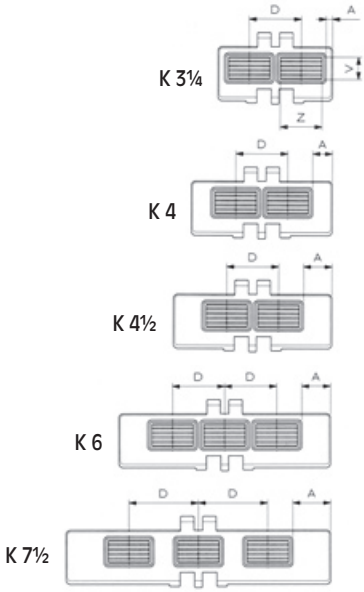

HF 820 (Straight Running - Rubber Pad)

Chain material see page 12

Sprockets and Idler wheels see pages 196÷199

Sprocket positioning see page 299

MATERIAL	REGINA REF.	CHAIN WIDTH W		PLATE THICKNESS T		PADS PITCH D		A		WORKING LOAD (25°C/77°F)		CHAIN WEIGHT	
		mm	inches	mm	inches	mm	inches	mm	inches	N	lbs	kg/m	lbs/ft
ACETAL RESIN (LW)	HF 820 LW K 3 ¼	82,6	3.25	4,0	0.157	37,5	1.476	4,5	0.177	1600	360	0,97	0.65
	HF 820 LW K 4	101,6	4.00	4,0	0.157	37,5	1.476	14,0	0.551	1600	360	1,09	0.73
	HF 820 LW K 4 ½	114,3	4.50	4,0	0.157	37,5	1.476	20,4	0.803	1600	360	1,15	0.77
	HF 820 LW K 6	152,4	6.00	4,0	0.157	37,5	1.476	20,7	0.815	1600	360	1,35	0.91
	HF 820 LW K 7 ½	190,5	7.50	4,0	0.157	50,0	1.969	27,3	1.075	1600	360	1,58	1.06

Standard length: 3,048 m (10 feet)

FliteTop®

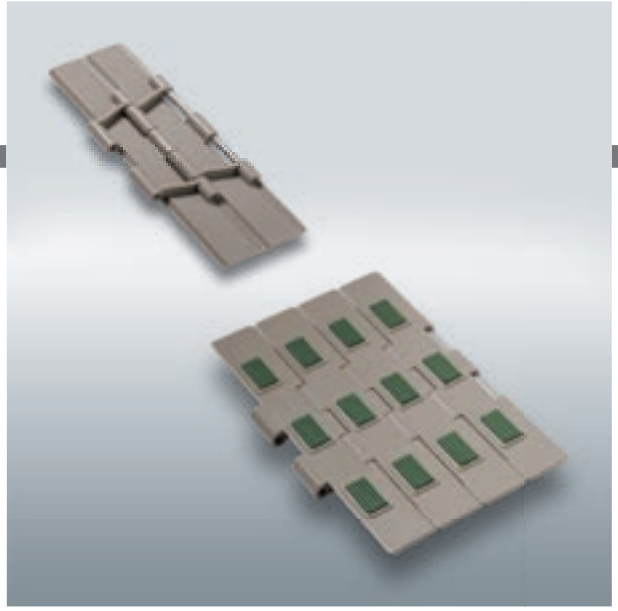

STRAIGHT RUNNING CHAIN WITH RUBBER SURFACE

HF 821 SERIES - DOUBLE HINGE

- Reinforced top plate thickness 4,8 mm.

Reference	Standard Materials LW
HF 821	

Pad Material: Thermoplastic rubber (see page 62).
Pin Material: Cold rolled austenitic stainless steel.

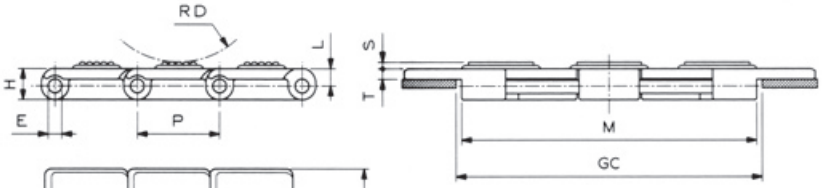

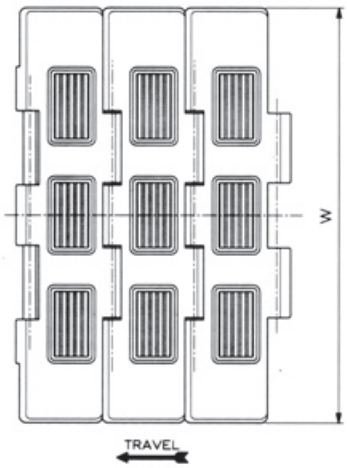

Dimension	mm	inches
P	38,1	1.5
M	136,5	5.374
L	8	.315
H	14,3	.563
E	6,35	.25
S	3	.118
V	16	.63
Z	30	1.181
RD	40	1.575
GC	140	5.512

Rubber pads positioning

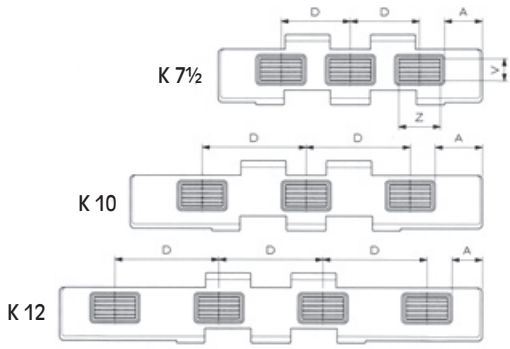

Chain material see page 12

Sprockets and Idler wheels see pages 200÷201

Sprocket positioning see page 299

HF 821 (Straight Running - Reinforced Top Plate Thickness - Double Hinge - Rubber Pad)

MATERIAL	REGINA REF.	CHAIN WIDTH W		PLATE THICKNESS T		PADS PITCH D		A		WORKING LOAD (25°C/77°F)		CHAIN WEIGHT	
		mm	inches	mm	inches	mm	inches	mm	inches	N	lbs	kg/m	lbs/ft
ACETAL RESIN (LW)	HF 821 LW K 7 ½	190,5	7.50	4,8	0.189	50,0	1.969	27,3	1.075	2750	619	2,64	1.77
	HF 821 LW K 10	254,0	10.00	4,8	0.189	75,0	2.953	34,0	1.339	2750	619	3,08	2.07
	HF 821 LW K 12	304,8	12.00	4,8	0.189	75,0	2.953	21,9	0.862	2750	619	3,40	2.28

Standard length: 3,048 m (10 feet)

FliteTop®

SIDEFLEXING CHAIN WITH RUBBER SURFACE

HF 880 SERIES - BEVEL

Reference	Standard Materials LW
HF 880	

Pad Material: Thermoplastic rubber (see page 62).
Pin Material: Cold rolled austenitic stainless steel.

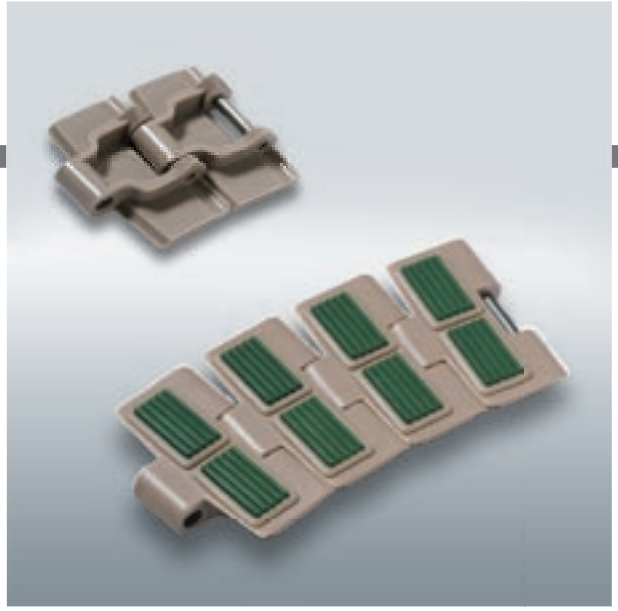

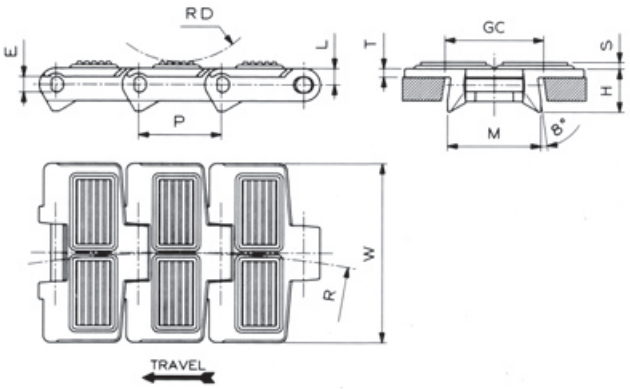

Dimension	mm	inches
P	38,1	1.5
M	43,0	1.693
L	7,6	.299
H	19,9	.783
E	7,05	.278
S	3	.118
V	16	.63
Z	30	1.181
RD	40	1.575
GC (Straight)	44,5	1.752
GC (Curve)	41,5	1.634

Rubber pads positioning

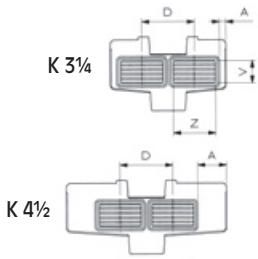

Chain material see page 12
Sprockets and Idler wheels see pages 202÷205
Corner tracks see page 283
Sprocket positioning see page 299

HF 880 (Sideflexing - Bevel - Rubber Pad)

MATERIAL	REGINA REF.	CHAIN WIDTH W		PLATE THICKNESS T		PADS PITCH D		A		SIDEFLEXING RADIUS R		WORKING LOAD (25°C/77°F)		CHAIN WEIGHT	
		mm	inches	mm	inches	mm	inches	mm	inches	mm	inches	N	lbs	kg/m	lbs/ft
ACETAL RESIN (LW)	HF 880 LW K 3 ¼	82,6	3.25	4,0	0.157	37,5	1.476	4,5	0.177	457,2	18	2000	450	1,04	0.70
	HF 880 LW K 4 ½	114,3	4.50	4,0	0.157	37,5	1.476	20,4	0.803	609,6	24	2000	450	1,19	0.80

Standard length: 3,048 m (10 feet)

FliteTop®

SIDEFLEXING CHAIN WITH RUBBER SURFACE

HF 880T SERIES - TAB

Reference	Standard Materials LW
HF 880T	

Pad Material: Thermoplastic rubber (see page 62).
Pin Material: Cold rolled austenitic stainless steel.

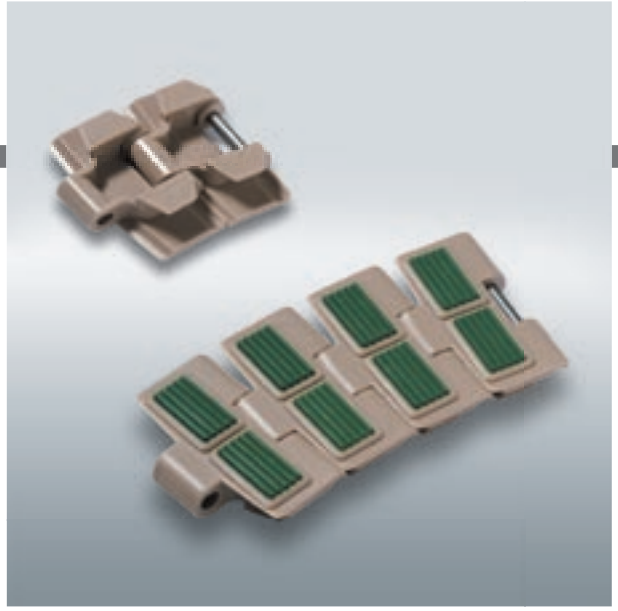

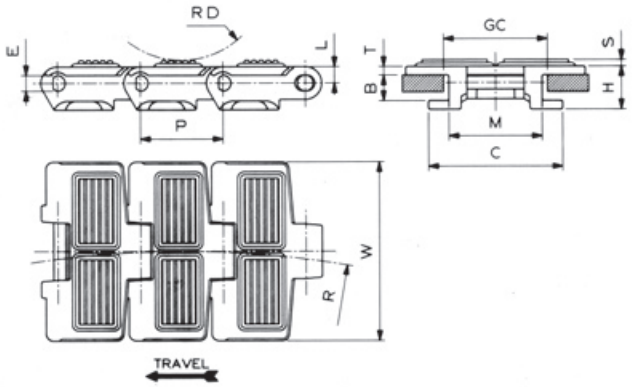

Dimension	mm	inches
P	38,1	1.5
M	42,9	1.689
C	62	2.441
L	7,6	.299
H	19,9	.783
E	7,05	.278
B	11,9	.469
S	3	.118
V	16	.63
Z	30	1.181
RD	40	1.575
GC (Straight)	46	1.811
GC (Curve)	44,5	1.752

Rubber pads positioning

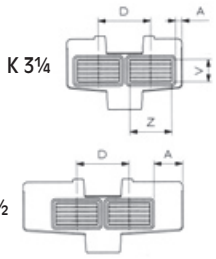

Chain material see page 12

Sprockets and Idler wheels see pages 202÷205

Corner tracks see page 280

Sprocket positioning see page 299

HF 880T (Sideflexing - Tab - Rubber Pad)

MATERIAL	REGINA REF.	CHAIN WIDTH W		PLATE THICKNESS T		PADS PITCH D		A		SIDEFLEXING RADIUS R		WORKING LOAD (25°C/77°F)		CHAIN WEIGHT	
		mm	inches	mm	inches	mm	inches	mm	inches	mm	inches	N	lbs	kg/m	lbs/ft
ACETAL RESIN (LW)	HF 880T LW K 3 ¼	82,6	3.25	4,0	0.157	37,5	1.476	4,5	0.177	457,2	18	2000	450	1,16	0.78
	HF 880T LW K 4 ½	114,3	4.50	4,0	0.157	37,5	1.476	20,4	0.803	609,6	24	2000	450	1,35	0.91

Standard length: 3,048 m (10 feet)

FliteTop®

SIDEFLEXING CHAIN WITH RUBBER SURFACE

HF 882T SERIES - TAB, HEAVY DUTY 57 mm HINGE

- Reinforced top plate thickness 4,8 mm.

Reference	Standard Materials LW
HF 882T	

Pad Material: Thermoplastic rubber (see page 62).
Pin Material: Cold rolled austenitic stainless steel.

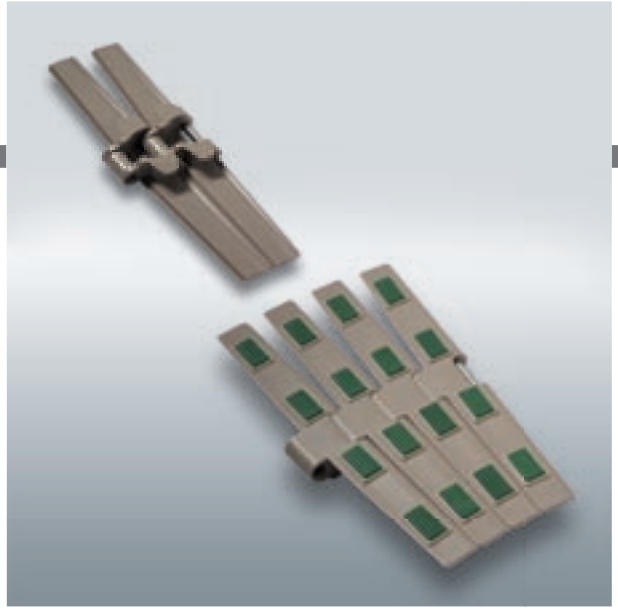

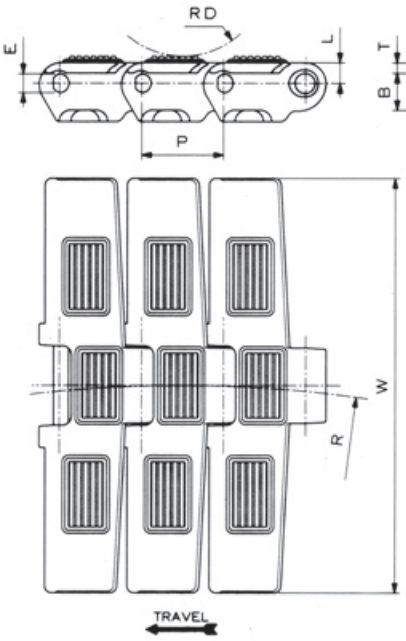

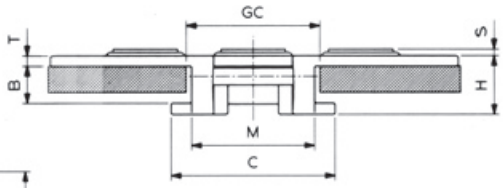

Dimension	mm	inches
P	38,1	1.5
M	57	2.244
C	76	2.992
L	9,5	.374
H	27,1	1.067
E	8,7	.343
B	17	.669
S	3	.118
V	16	.63
Z	30	1.181
Y	6	.236
RD	40	1.575
GC (Straight)	60	2.362
GC (Curve)	60	2.362

Rubber pads positioning

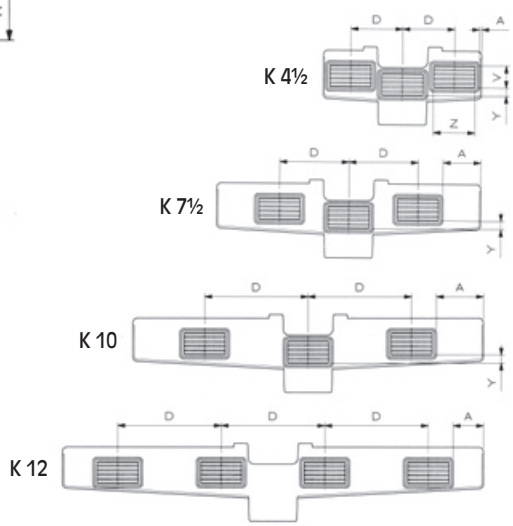

Chain material see page 12

Sprockets and Idler wheels see pages 206÷209

Corner tracks see pages 280÷281

Sprocket positioning see page 299

HF 882T (Sideflexing - Reinforced Top Plate Thickness - Heavy Duty 57 mm Hinge - Tab - Rubber Pad)

MATERIAL	REGINA REF.	CHAIN WIDTH W		PLATE THICKNESS T		PADS PITCH D		A		SIDEFLEXING RADIUS R		WORKING LOAD (25°C/77°F)		CHAIN WEIGHT	
		mm	inches	mm	inches	mm	inches	mm	inches	mm	inches	N	lbs	kg/m	lbs/ft
ACETAL RESIN (LW)	HF 882T LW K 4 ½	114,3	4.50	4,8	0.189	37,5	1.476	1,6	0.063	609,6	24	2800	630	2,17	1.46
	HF 882T LW K 7 ½	190,5	7.50	4,8	0.189	50,0	1.969	27,2	1.071	609,6	24	2800	630	2,59	1.74
	HF 882T LW K 10	254,0	10.00	4,8	0.189	75,0	2.953	34,0	1.339	609,6	24	2800	630	2,88	1.94
	HF 882T LW K 12	304,8	12.00	4,8	0.189	75,0	2.953	21,9	0.862	609,6	24	2800	630	3,17	2.13

Standard length: 3,048 m (10 feet)

FliteTop®

SIDEFLEXING CHAIN WITH RUBBER SURFACE

HF 878T SERIES - TAB, REDUCED SIDEFLEXING RADIUS (200 mm)

- Suitable for use with turning discs (Ref. CMA 09 878).
- Reinforced top plate thickness 4,8 mm.

Reference	Standard Materials LW
HF 878T	

Pad Material: Thermoplastic rubber (see page 62).
Pin Material: Cold rolled austenitic stainless steel.

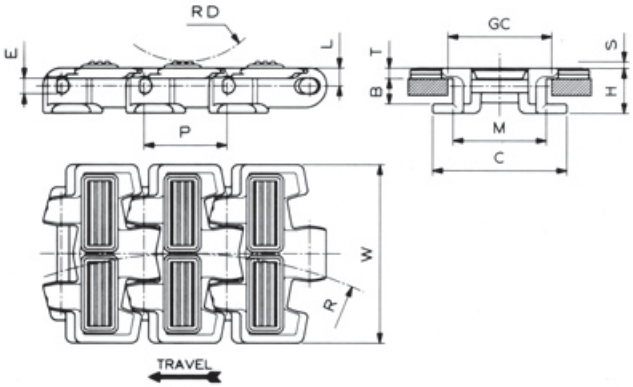

Dimension	mm	inches
P	38,1	1.5
M	42,9	1.689
C	61,8	2.433
L	8,3	.327
H	20,8	.819
E	7,05	.278
B	11,9	.469
S	3	.118
V	11	.433
Z	30	1.181
RD	40	1.575
GC (Straight)	46	1.811
GC (Curve)	44,5	1.752

Rubber pads positioning

K 3¼

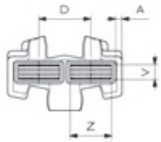

Chain material see page 12

Sprockets and Idler wheels see pages 202÷205

Sprocket positioning see page 299

HF 878T (Sideflexing - Reinforced Top Plate Thickness - Tab - Reduced sideflexing Radius - Rubber Pad)

MATERIAL	REGINA REF.	CHAIN WIDTH W		PLATE THICKNESS T		PADS PITCH D		A		SIDEFLEXING RADIUS R		WORKING LOAD (25°C/77°F)		CHAIN WEIGHT	
		mm	inches	mm	inches	mm	inches	mm	inches	mm	inches	N	lbs	kg/m	lbs/ft
ACETAL RESIN (LW)	HF 878T LW K 3 ¼	82,6	3.25	4,8	0.189	37,5	1.476	4,5	0.177	200,0	7.874	2000	450	1,16	0.78

Standard length: 3,048 m (10 feet)

FliteTop®

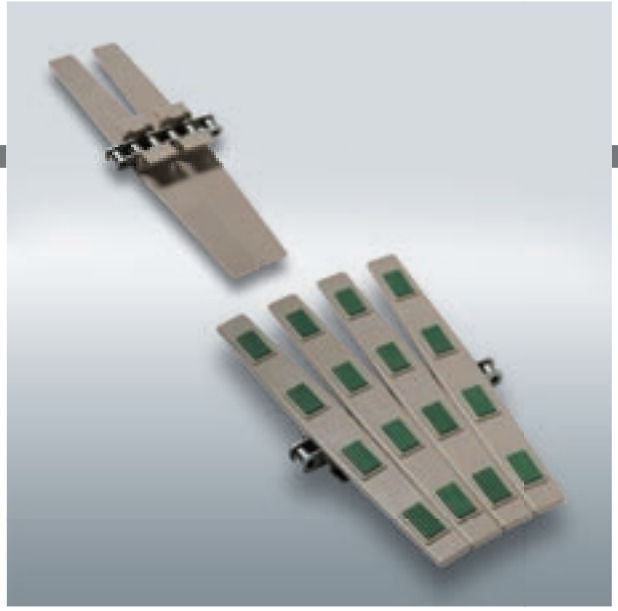

SIDEFLEXING TWO PIECE CHAIN WITH RUBBER SURFACE

HF 1873T SERIES

- Higher mechanical strength, possibility of longer conveyors and reduced elongation vs. one piece chains, even in presence of frequent starts under load.

Reference	Standard Materials LW
HF 1873T	

Pad Material: Thermoplastic rubber (see page 62).
Base Chain Material: Carbon steel or Stainless steel.

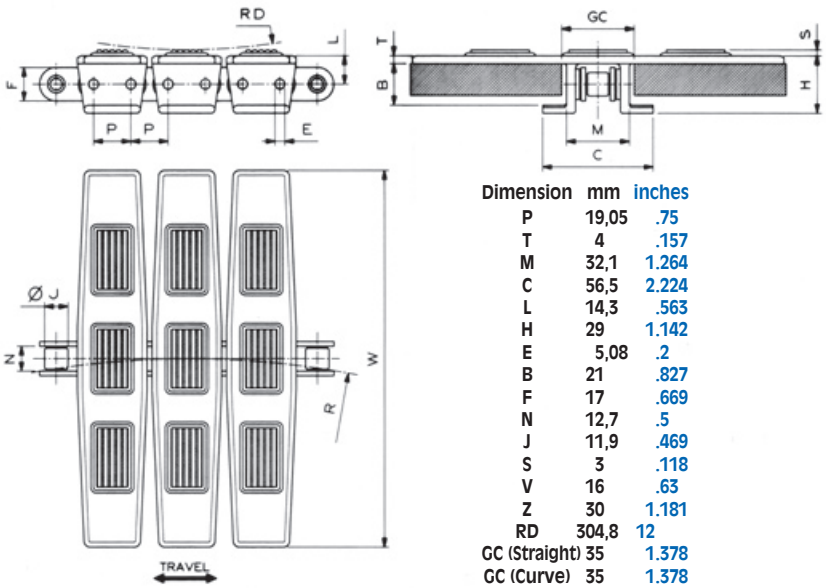

Dimension	mm	inches
P	19,05	.75
T	4	.157
M	32,1	1.264
C	56,5	2.224
L	14,3	.563
H	29	1.142
E	5,08	.2
B	21	.827
F	17	.669
N	12,7	.5
J	11,9	.469
S	3	.118
V	16	.63
Z	30	1.181
RD	304,8	12
GC (Straight)	35	1.378
GC (Curve)	35	1.378

Rubber pads positioning

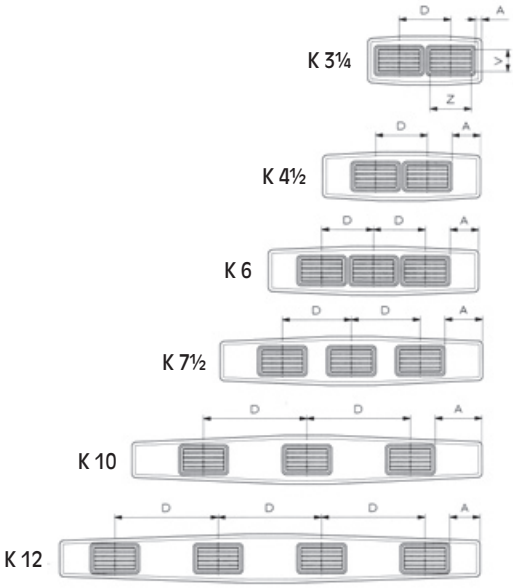

Chain material see page 12

Sprockets see page 211

Corner tracks see pages 280÷281

Sprocket positioning see page 300

HF 1873T (Sideflexing - Tab - Rubber Pad)

BASE CHAIN MATERIAL	FLIGHT MATERIAL	REGINA REF.	CHAIN WIDTH W		PADS PITCH D		A		SIDEFLEXING RADIUS R		WORKING LOAD (25°C/77°F)		CHAIN WEIGHT	
			mm	inches	mm	inches	mm	inches	mm	inches	N	lbs	kg/m	lbs/ft
CARBON STEEL	ACETAL RESIN (LW)	HF 1873T LW K 3 ¼	82,6	3.25	37,5	1.476	4,5	0.177	355,6	14	4500	1,013	2,42	1.63
		HF 1873T LW K 4 ½	114,3	4.50	37,5	1.476	20,4	0.803	355,6	14	4500	1,013	2,51	1.69
		HF 1873T LW K 6	152,4	6.00	37,5	1.476	20,7	0.815	457,2	18	4500	1,013	2,74	1.84
		HF 1873T LW K 7 ½	190,5	7.50	50,0	1.969	27,2	1.071	457,2	18	4500	1,013	3,03	2.04
		HF 1873T LW K 10	254,0	10.00	75,0	2.953	34,0	1.339	457,2	18	4500	1,013	3,16	2.12
		HF 1873T LW K 12	304,8	12.00	75,0	2.953	21,9	0.862	609,6	24	4500	1,013	3,38	2.27
STAINLESS STEEL (SS)		HF 1873T LW SS K 3 ¼	82,6	3.25	37,5	1.476	4,5	0.177	355,6	14	3500	788	2,41	1.62
		HF 1873T LW SS K 4 ½	114,3	4.50	37,5	1.476	20,4	0.803	355,6	14	3500	788	2,46	1.65
		HF 1873T LW SS K 6	152,4	6.00	37,5	1.476	20,7	0.815	457,2	18	3500	788	2,72	1.83
		HF 1873T LW SS K 7 ½	190,5	7.50	50,0	1.969	27,2	1.071	457,2	18	3500	788	3,01	2.02
		HF 1873T LW SS K 10	254,0	10.00	75,0	2.953	34,0	1.339	457,2	18	3500	788	3,14	2.11
		HF 1873T LW SS K 12	304,8	12.00	75,0	2.953	21,9	0.862	609,6	24	3500	788	3,36	2.26

Standard length: 3,048 m (10 feet)

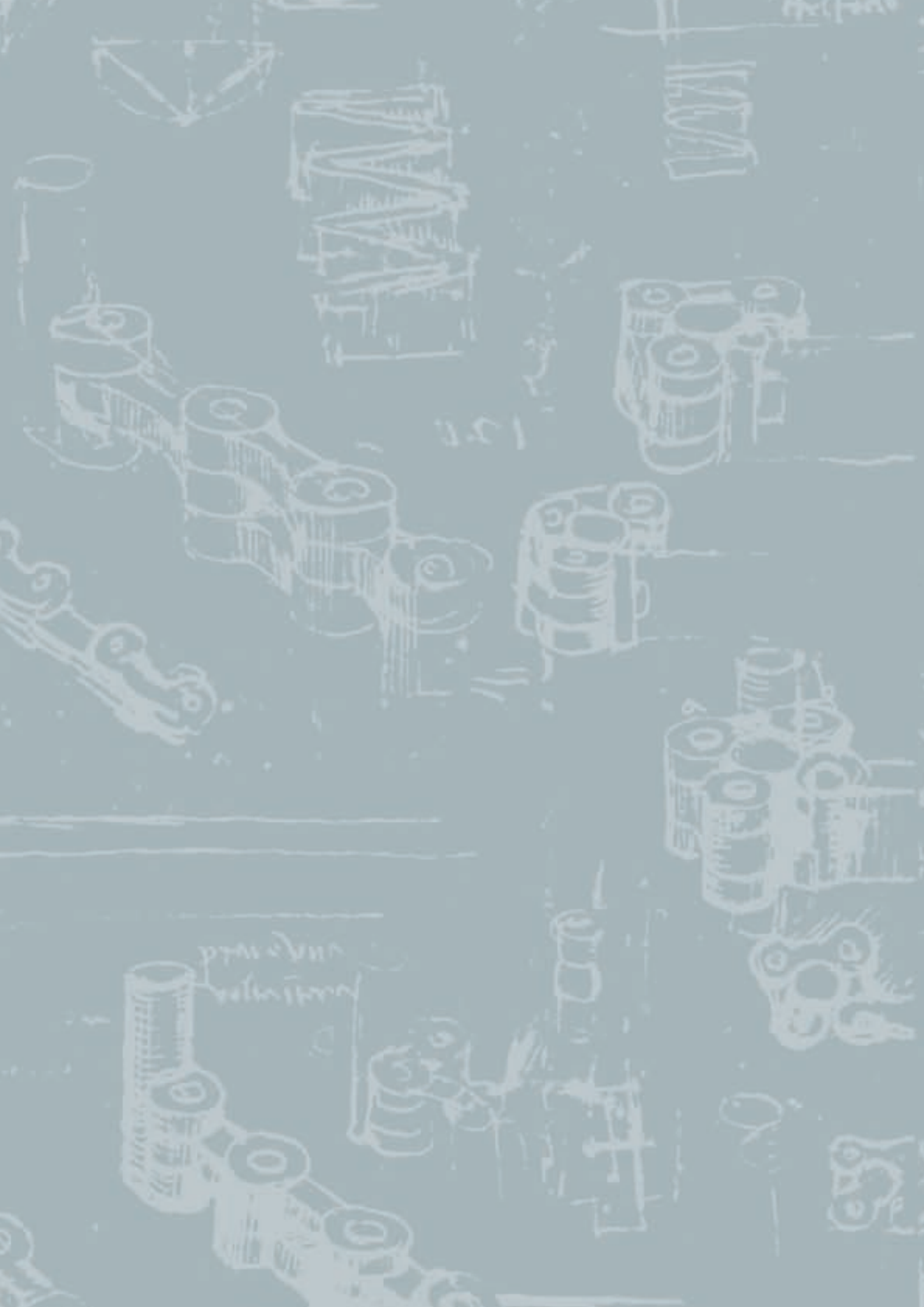

FliteTop®

Two-Piece Chains

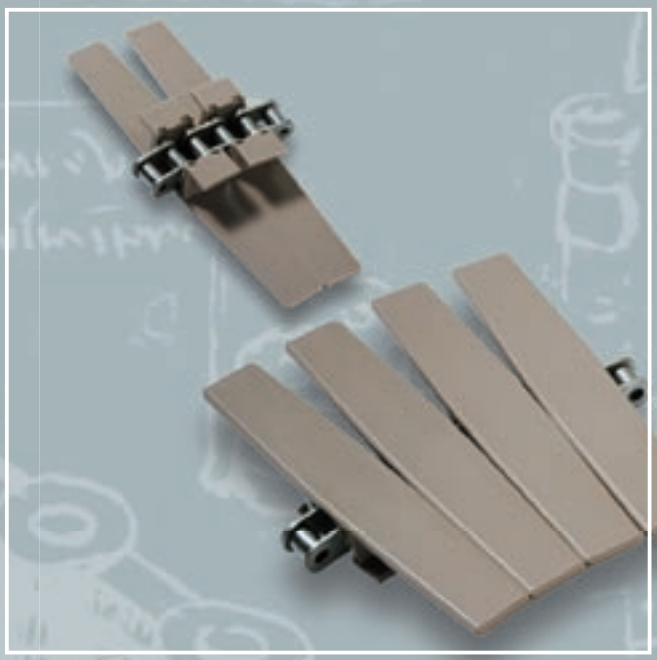

FliteTop®

TWO PIECE CHAINS

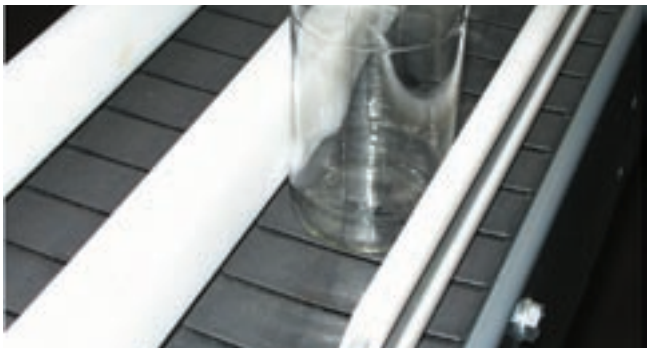

APPLICATIONS:

- Packaging lines
- Packaging machines
- Glass manufacturing
- Automotive

RANGE:

Flight Materials

STEEL FLIGHTS

- Carbon Steel: Good wear resistance
- Stainless Steel: Good wear and corrosion resistance

PLASTIC FLIGHTS

- AR – Abrasion Resistant reinforced polyamide.
  Excellent wear resistance and low dusting. Particularly suitable for glass mfg lines
- LW – DuPont™ Delrin® acetal resin. It offers very good mechanical
  strength and wear resistance in combination with low coefficients of friction

Base roller chain materials

- Carbon Steel:
  excellent mechanical strength, excellent resistance to the elongation
- Stainless Steel:
  good mechanical strength, corrosion resistance, good resistance to the elongation

On request, it is possible to supply carbon steel chain with stainless steel flights

Available pitches:

- ½" (12.7 mm) – packaging machines applications
- ¾" (19.05 mm) – for applications with heavy loads and long center to center distance,
  where excellent mechanical strength and resistance to the elongation are required

BENEFITS:

- Possibility of longer conveyors and reduced elongation vs. one piece chains, even in presence of frequent starts under load
- Higher speed
- Very high loads
- Easily replaceable plastic flights
- 1874TM (sideflexing chain with steel flights): reduced gaps
- 1863T (sideflexing chain with plastic flights): overlapping flights for reduced gaps

FliteTop®

STRAIGHT RUNNING TWO PIECE CHAIN STEEL FLIGHTS

1864 SERIES - ¾" PITCH

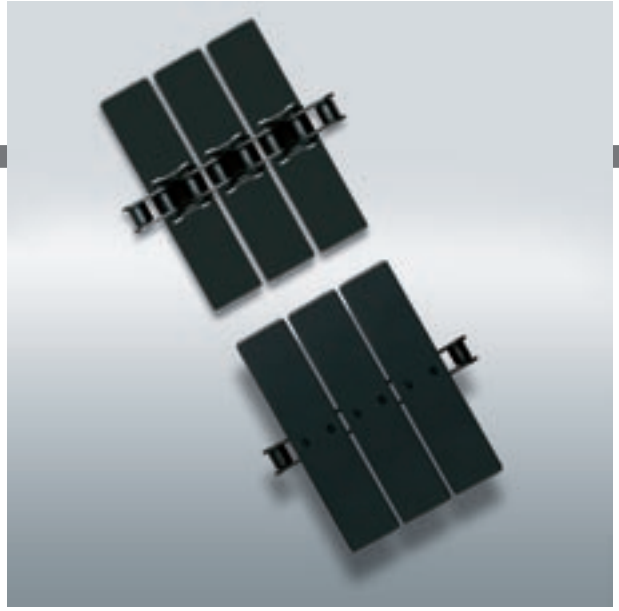

Reference	Standard Flight Materials S	SS
1864		

Base Chain Material: Carbon steel or Stainless steel.

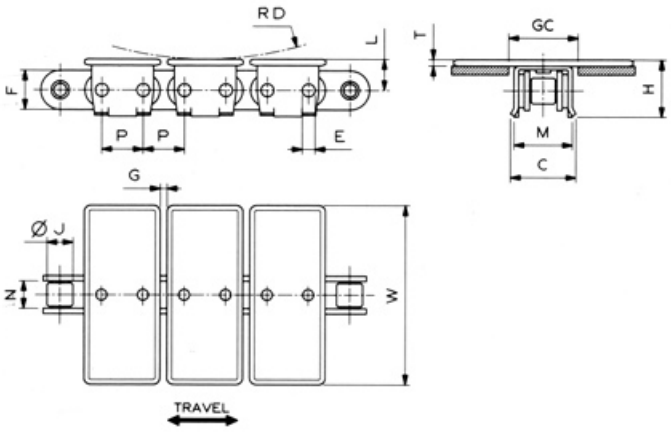

Dimension	mm	inches
P	19,05	0.75
T	3	.118
M	27	1.063
C	30,2	1.189
L	14,3	.563
H	26,4	1.039
E	5,95	.234
F	18	.709
N	12,7	.5
J	11,9	.469
RD	160	6.299
GC	35	1.378

Chain material see page 12
Sprockets see page 211
Sprocket positioning see page 300

1864 (Straight Running - ¾" pitch)

BASE CHAIN MATERIAL	FLIGHT MATERIAL	REGINA REF.	CHAIN WIDTH W		GAP G		WORKING LOAD (25°C/77°F)		CHAIN WEIGHT	
			mm	inches	mm	inches	N	lbs	kg/m	lbs/ft
CARBON STEEL	CARBON STEEL	1864 K 3 ¼	82,6	3.25	3,2	1.126	5500	1,238	4,02	2.70
		1864 K 4 ½	114,3	4.50	3,2	1.126	5500	1,238	4,60	3.09
		1864 K 6	152,4	6.00	3,2	1.126	5500	1,238	5,70	3.83
		1864 K 7 ½	190,5	7.50	3,2	1.126	5500	1,238	6,40	4.30
STAINLESS STEEL (SS)	STAINLESS STEEL (SS)	SS 1864 K 3 ¼	82,6	3.25	3,2	1.126	4500	1,013	3,99	2.68
		SS 1864 K 4 ½	114,3	4.50	3,2	1.126	4500	1,013	4,80	3.23
		SS 1864 K 6	152,4	6.00	3,2	1.126	4500	1,013	5,70	3.83
		SS 1864 K 7 ½	190,5	7.50	3,2	1.126	4500	1,013	6,10	4.10

Standard length: 3,048 m (10 feet)

FliteTop®

SIDEFLEXING TWO PIECE CHAIN STEEL FLIGHTS

1874T SERIES - TAB, ¾" PITCH
1874TM SERIES - TAB, REDUCED GAP

	Standard Flight Materials	
Reference	S	SS
1874T	■	□
1874TM	■	

Base Chain Material: Carbon steel or Stainless steel.

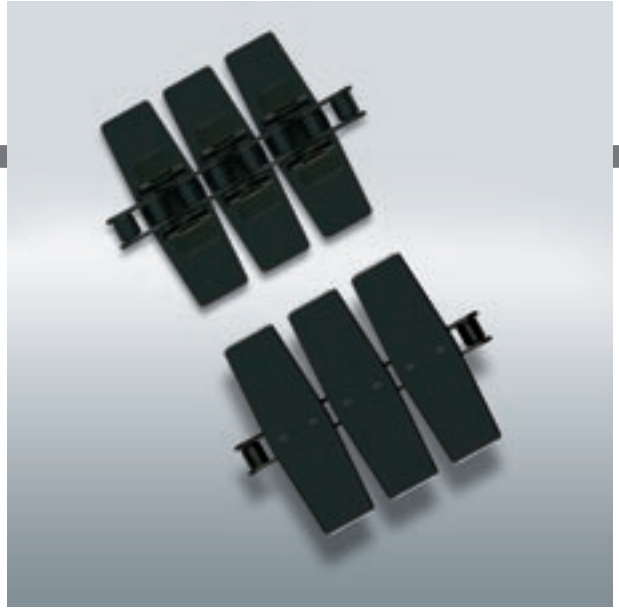

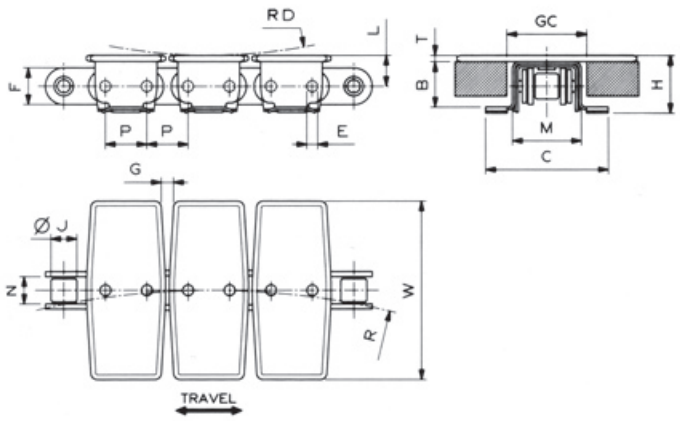

Dimension	mm	inches
P	19,05	.750
T	3	.118
M	31,8	1.252
C	56,5	2.224
L	14,3	.563
H	26,8	1.055
E	5,08	.2
B	21	.827
F	17	.669
N	12,7	.5
J	11,9	.469
RD	250	9.843
GC (Straight)	35	1.378
GC (Curve)	35	1.378

Chain material see page 12
Sprockets see page 211
Corner tracks see pages 280÷281
Sprocket positioning see page 300

1874T (Sideflexing - Tab - ¾" pitch)

BASE CHAIN MATERIAL	FLIGHT MATERIAL	REGINA REF.	CHAIN WIDTH W		GAP G		SIDEFLEXING RADIUS R		WORKING LOAD (25°C/77°F)		CHAIN WEIGHT	
			mm	inches	mm	inches	mm	inches	N	lbs	kg/m	lbs/ft
CARBON STEEL	CARBON STEEL	**1874T K 3 ¼**	82,6	3.25	8,2	0.323	381,0	15	4500	1,013	4,20	2.82
		1874T K 4 ½	114,3	4.50	8,2	0.323	381,0	15	4500	1,013	4,76	3.20
		1874T K 6	152,4	6.00	8,2	0.323	457,2	18	4500	1,013	5,58	3.75
		1874T K 7 ½	190,5	7.50	8,2	0.323	609,6	24	4500	1,013	6,40	4.30
STAINLESS STEEL (SS)	STAINLESS STEEL (SS)	**SS 1874T K 3 ¼**	82,6	3.25	8,2	0.323	381,0	15	3500	788	4,20	2.82
		SS 1874T K 4 ½	114,3	4.50	8,2	0.323	381,0	15	3500	788	4,80	3.23
		SS 1874T K 6	152,4	6.00	8,2	0.323	457,2	18	3500	788	5,55	3.73
		SS 1874T K 7 ½	190,5	7.50	8,2	0.323	609,6	24	3500	788	6,30	4.23

Standard length: 3,048 m (10 feet)

Chain material see page 12
Sprockets see page 211
Corner tracks see pages 280÷281
Sprocket positioning see page 300

1874TM (Sideflexing - Tab - ¾" pitch - Reduced Gap)

BASE CHAIN MATERIAL	FLIGHT MATERIAL	REGINA REF.	CHAIN WIDTH W		GAP G		SIDEFLEXING RADIUS R		WORKING LOAD (25°C/77°F)		CHAIN WEIGHT	
			mm	inches	mm	inches	mm	inches	N	lbs	kg/m	lbs/ft
CARBON STEEL	CARBON STEEL	**1874TM K 4 ½**	114,3	4.50	5,7	0.224	609,6	24	4500	1,013	4,80	3.23

Standard length: 3,048 m (10 feet)

FliteTop®

STRAIGHT RUNNING TWO PIECE CHAIN THERMOPLASTIC FLIGHTS

843 SERIES - ½" PITCH.

Reference	Standard Flight Materials LW
843	

Base Chain Material: Carbon steel or Stainless steel.

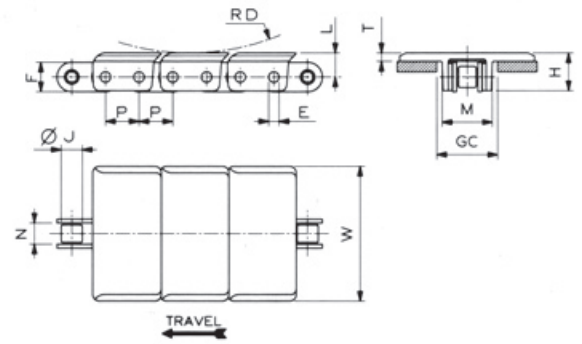

Dimension	mm	inches
P	12,7	.5
T	3,2	.126
M	20,6	.811
L	9,1	.358
H	14,3	.563
E	3,96	.156
F	11,1	.437
N	7,95	.313
J	7,95	.313
RD	90	3.543
GC	23,8	.937

Chain material see page 12
Sprockets see page 210
Sprocket positioning see page 300

843 (Straight Running - ½" pitch)

BASE CHAIN MATERIAL	FLIGHT MATERIAL	REGINA REF.	CHAIN WIDTH W		WORKING LOAD (25°C/77°F)		CHAIN WEIGHT	
			mm	inches	N	lbs	kg/m	lbs/ft
CARBON STEEL	ACETAL RESIN (LW)	LW 843 K 1 ⅜	34,9	1,37	3500	788	0,83	0,56
		LW 843 K 2	50,8	2,00	3500	788	0,89	0,60
		LW 843 K 3 ¼	82,6	3,25	3500	788	1,04	0,70
STAINLESS STEEL (SS)		LW 843 SS K 1 ⅜	34,9	1,37	2700	680	0,83	0,56
		LW 843 SS K 2	50,8	2,00	2700	680	0,89	0,60
		LW 843 SS K 3 ¼	82,6	3,25	2700	680	1,04	0,70

Standard length: 3,048 m (10 feet)

FliteTop®

STRAIGHT RUNNING TWO PIECE CHAIN THERMOPLASTIC FLIGHTS

845 SERIES - BIDIRECTIONAL, ½" PITCH

Reference	Standard Flight Materials LW
845	

Base Chain Material: Carbon steel or Stainless steel.

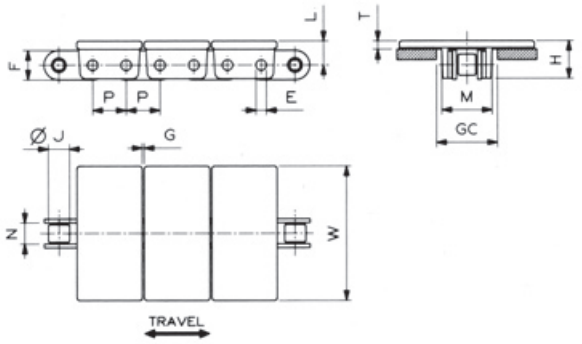

Dimension	mm	inches
P	12,7	.5
T	3,2	.126
M	20,6	.811
L	9,1	.358
H	14,3	.563
E	3,96	.156
F	11,1	.437
N	7,95	.313
J	7,95	.313
GC	23,8	.937

845 (Straight Running - ½" pitch - Bidirectional)

Chain material see page 12
Sprockets see page 210
Sprocket positioning see page 300

BASE CHAIN MATERIAL	FLIGHT MATERIAL	REGINA REF.	CHAIN WIDTH W		GAP G		WORKING LOAD (25°C/77°F)		CHAIN WEIGHT	
			mm	inches	mm	inches	N	lbs	kg/m	lbs/ft
CARBON STEEL	ACETAL RESIN (LW)	LW 845 K 1 ⅜	34,9	1.37	0,2	0.01	3500	788	0,81	0.54
		LW 845 K 40	40,0	1.57	0,2	0.01	3500	788	0,83	0.56
		LW 845 K 2	50,8	2.00	0,2	0.01	3500	788	0,89	0.60
STAINLESS STEEL (SS)		LW 845 SS K 1 ⅜	34,9	1.37	0,2	0.01	2700	608	0,81	0.54
		LW 845 SS K 40	40,0	1.57	0,2	0.01	2700	608	0,83	0.56
		LW 845 SS K 2	50,8	2.00	0,2	0.01	2700	608	0,89	0.60

Standard length: 3,048 m (10 feet)

FliteTop®

STRAIGHT RUNNING TWO PIECE CHAIN THERMOPLASTIC FLIGHTS

RR 845 SERIES - BIDIRECTIONAL, ½" PITCH, RAISED RIB

- Suitable for use with transfer comb.

Reference	Standard Flight Materials LW
RR 845	

Base Chain Material: Carbon steel or Stainless steel.
Comb Material: Acetal resin

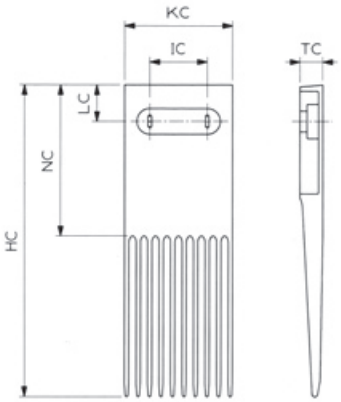

Dimension	mm	inches
KC	59,5	2.343
HC	152,4	6
TC	12,7	.5
NC	63,5	2.5
IC	31,8	1.252
LC	21,6	.85

Ref: TC845-01

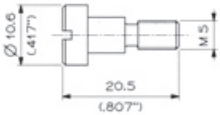

Ref: 16300005

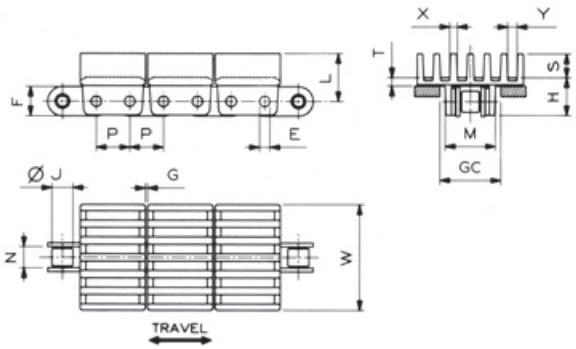

Dimension	mm	inches
P	12,7	.5
T	3,2	.126
M	20,6	.811
L	18,1	.713
H	14,3	.563
E	3,96	.156
F	11,1	.437
N	7,95	.313
J	7,95	.313
S	9	.354
X	2,8	.11
Y	3,6	.142
GC	23,8	.937

Chain material see page 12
Sprockets see page 210
Sprocket positioning see page 300

RR 845 (Straight Running - ½" pitch - Bidirectional - Raised Rib)

BASE CHAIN MATERIAL	FLIGHT MATERIAL	REGINA REF.	CHAIN WIDTH W		GAP G		WORKING LOAD (25°C/77°F)		CHAIN WEIGHT	
			mm	inches	mm	inches	N	lbs	kg/m	lbs/ft
CARBON STEEL	ACETAL RESIN (LW)	RR 845 LW 40	40,0	1.57	0,2	0.01	3500	788	1,08	0.73
		RR 845 LW K 53,6	53,6	2.11	0,2	0.01	3500	788	1,22	0.82
STAINLESS STEEL (SS)		RR 845 LW SS K 40	40,0	1.57	0,2	0.01	2700	608	1,08	0.73
		RR 845 LW SS K 53,6	53,6	2.11	0,2	0.01	2700	608	1,22	0.82

Standard length: 3,048 m (10 feet)

FliteTop®

STRAIGHT RUNNING TWO PIECE CHAIN THERMOPLASTIC FLIGHTS

863 SERIES - ¾" PITCH
963 SERIES - ¾" PITCH, SIDEBOW BASE CHAIN

Reference	Standard Flight Materials LW
863	
963	

Base Chain Material: Carbon steel or Stainless steel.

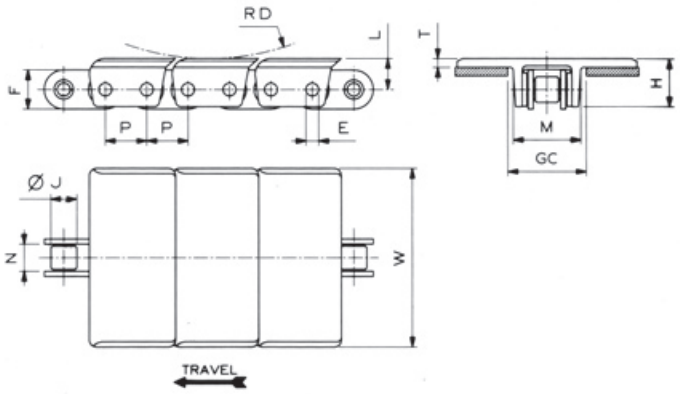

Dimension	mm	inches
P	19,05	.75
T	4	.157
M	34,1	1.343
L	14,3	.563
H	22,2	.874
F	18	.709
N	12,7	.5
J	11,9	.469
RD	115	4.528
GC	36,5	1.437

Chain material see page 12
Sprockets see page 211
Sprocket positioning see page 300

863 (Straight Running - ¾" pitch)

BASE CHAIN MATERIAL	FLIGHT MATERIAL	REGINA REF.	CHAIN WIDTH W		PIN DIAMETER P		WORKING LOAD (25°C/77°F)		CHAIN WEIGHT	
			mm	inches	mm	inches	N	lbs	kg/m	lbs/ft
CARBON STEEL	ACETAL RESIN (LW)	LW 863 K 3 ¼	82,6	3.25	5,94	0.23	5000	1,125	2,19	1.47
		LW 863 K 4 ½	114,3	4.50	5,94	0.23	5000	1,125	2,35	1.58
		LW 863 K 6	152,4	6.00	5,94	0.23	5000	1,125	2,53	1.70
		LW 863 K 7 ½	190,5	7.50	5,94	0.23	5000	1,125	2,68	1.80
STAINLESS STEEL (SS)		LW 863 SS K 3 ¼	82,6	3.25	5,94	0.23	4000	900	2,10	1.41
		LW 863 SS K 4 ½	114,3	4.50	5,94	0.23	4000	900	2,23	1.50
		LW 863 SS K 6	152,4	6.00	5,94	0.23	4000	900	2,53	1.70
		LW 863 SS K 7 ½	190,5	7.50	5,94	0.23	4000	900	2,68	1.80

Standard length: 3,048 m (10 feet)

Chain material see page 12
Sprockets see page 211
Sprocket positioning see page 300

963 (Straight Running - ¾" pitch - Side Bow Base Chain)

BASE CHAIN MATERIAL	FLIGHT MATERIAL	REGINA REF.	CHAIN WIDTH W		PIN DIAMETER P		WORKING LOAD (25°C/77°F)		CHAIN WEIGHT	
			mm	inches	mm	inches	N	lbs	kg/m	lbs/ft
CARBON STEEL	ACETAL RESIN (LW)	LW 963 K 3 ¼	82,6	3.25	5,08	0.20	4500	1,013	2,11	1.42
		LW 963 K 4 ½	114,3	4.50	5,08	0.20	4500	1,013	2,27	1.53
		LW 963 K 6	152,4	6.00	5,08	0.20	4500	1,013	2,45	1.65
		LW 963 K 7 ½	190,5	7.50	5,08	0.20	4500	1,013	2,60	1.75
STAINLESS STEEL (SS)		LW 963 SS K 3 ¼	82,6	3.25	5,08	0.20	3500	788	2,02	1.36
		LW 963 SS K 4 ½	114,3	4.50	5,08	0.20	3500	788	2,15	1.44
		LW 963 SS K 6	152,4	6.00	5,08	0.20	3500	788	2,45	1.65
		LW 963 SS K 7 ½	190,5	7.50	5,08	0.20	3500	788	2,60	1.75

Standard length: 3,048 m (10 feet)

FliteTop®

SIDEFLEXING TWO PIECE CHAIN THERMOPLASTIC FLIGHTS

1843T SERIES - TAB, ½" PITCH

Reference	Standard Flight Materials LW
1843T	

Base Chain Material: Carbon steel or Stainless steel.

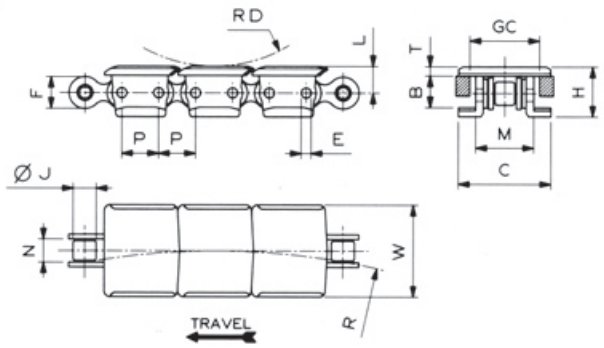

Dimension	mm	inches
P	12,7	.5
T	3,2	.126
M	20	.787
C	31,8	1.252
L	9,2	.362
H	17,2	.677
E	3,45	.136
B	10,9	.429
F	11,1	.437
N	7,95	.313
J	7,95	.313
RD	50	1.969
GC (Straight)	22,5	.886
GC (Curve)	22,5	.886

Chain material see page 12

Sprockets see page 210

Corner tracks see pages 280÷281

Sprocket positioning see page 300

1843T (Sideflexing - Tab - ½" pitch)

BASE CHAIN MATERIAL	FLIGHT MATERIAL	REGINA REF.	CHAIN WIDTH W		SIDEFLEXING RADIUS R		WORKING LOAD (25°C/77°F)		CHAIN WEIGHT	
			mm	inches	mm	inches	N	lbs	kg/m	lbs/ft
CARBON STEEL	ACETAL RESIN (LW)	LW 1843T K 1 ¼	31,8	1.25	254,0	10	2600	585	0,81	0.54
STAINLESS STEEL		LW 1843T SS K 1 ¼	31,8	1.25	254,0	10	2000	450	0,82	0.55

Standard length: 3,048 m (10 feet)

FliteTop®

SIDEFLEXING TWO PIECE CHAIN THERMOPLASTIC FLIGHTS

1863T SERIES - TAB, ¾" PITCH, REDUCED GAP

Reference	Standard Flight Materials LW	*AR
1863T		

Base Chain Material: Carbon steel or Stainless steel.

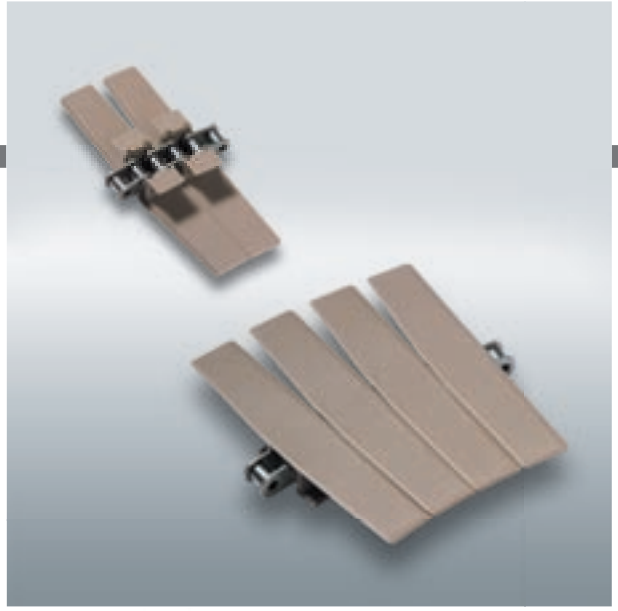

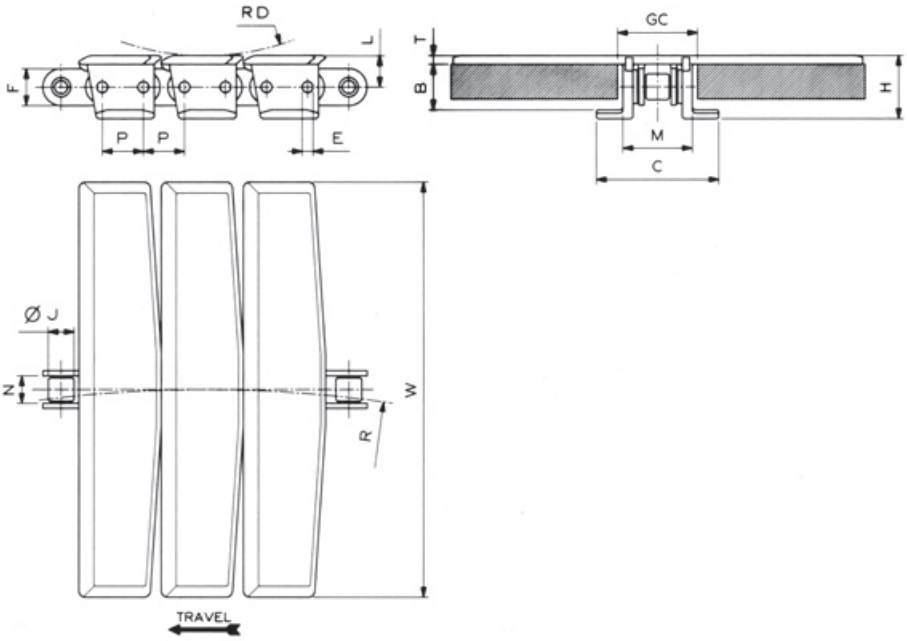

Dimension	mm	inches
P	19,05	.75
T	4	.157
M	32,1	1.264
C	56,5	2.224
L	14,3	.563
H	29	1.142
E	5,08	.2
B	21	.827
F	17	.669
N	12,7	.5
J	11,9	.469
RD	120	4.724
GC (Straight)	35	1.378
GC (Curve)	35	1.378

Chain material see page 12
Sprockets see page 211
Corner tracks see pages 280÷281
Sprocket positioning see page 300

1863T (Sideflexing - Tab - ¾" pitch - Reduced Gap)

BASE CHAIN MATERIAL	FLIGHT MATERIAL	REGINA REF.	CHAIN WIDTH W mm	CHAIN WIDTH W inches	SIDEFLEXING RADIUS R mm	SIDEFLEXING RADIUS R inches	WORKING LOAD (25°C/77°F) N	WORKING LOAD (25°C/77°F) lbs	CHAIN WEIGHT kg/m	CHAIN WEIGHT lbs/ft
CARBON STEEL	ACETAL RESIN (LW)	LW 1863T K 2 ¼	57,2	2.25	457,2	18	4500	1,013	2,03	1.36
		LW 1863T K 3 ¼	82,6	3.25	457,2	18	4500	1,013	2,16	1.45
		LW 1863T K 4 ½	114,3	4.50	457,2	18	4500	1,013	2,29	1.54
		LW 1863T K 7 ½	190,5	7.50	609,6	24	4500	1,013	2,67	1.79
		LW 1863T K 12	304,8	12.00	609,6	24	4500	1,013	3,16	2.12
		LW 1863T K 16	406,4	16.00	750,0	29.53	4500	1,013	3,54	2.38
	ABRASION RESISTANT RESIN* (AR)	AR 1863T K 3 ¼	82,6	3.25	457,2	18	4500	1,013	2,12	1.42
		AR 1863T K 4 ½	114,3	4.50	457,2	18	4500	1,013	2,22	1.49
STAINLESS STEEL (SS)	ACETAL RESIN (LW)	LW 1863T SS K 2 ¼	57,2	2.25	457,2	18	3500	788	2,01	1.35
		LW 1863T SS K 3 ¼	82,6	3.25	457,2	18	3500	788	2,14	1.44
		LW 1863T SS K 4 ½	114,3	4.50	457,2	18	3500	788	2,26	1.52
		LW 1863T SS K 7 ½	190,5	7.50	609,6	24	3500	788	2,65	1.78
		LW 1863T SS K 12	304,8	12.00	609,6	24	3500	788	3,14	2.11
		LW 1863T SS K 16	406,4	16.00	750,0	29.53	3500	788	3,51	2.36

* Due to different shrinkage of materials, actual width is larger than the standard.

Standard length: 3,048 m (10 feet)

FliteTop®

SIDEFLEXING TWO PICE CHAIN THERMOPLASTIC FLIGHTS

1873T SERIES - TAB, ¾" PITCH

Reference	Standard Flight Materials LW	*AR
1873T		

Base Chain Material: Carbon steel or Stainless steel.

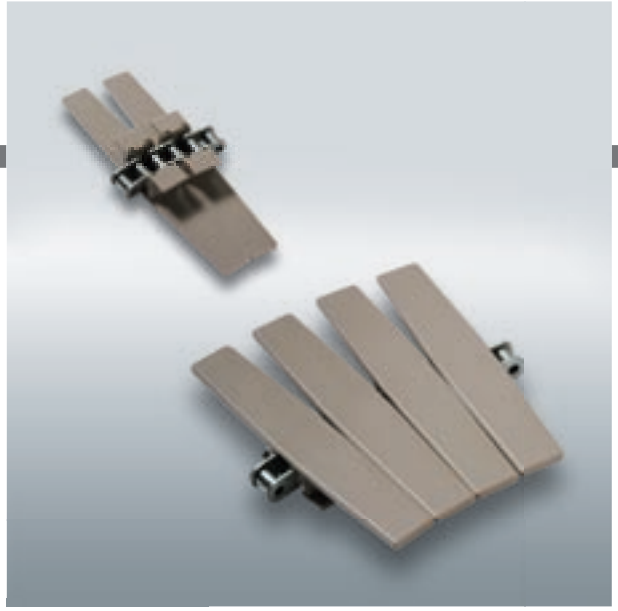

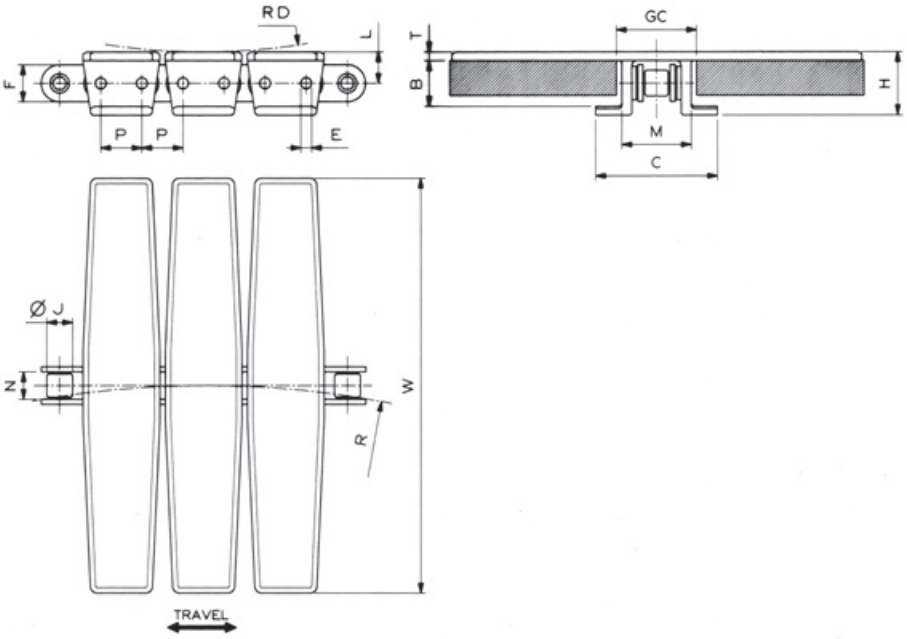

Dimension	mm	inches
P	19,05	.75
T	4	.157
M	32,1	1.264
C	56,5	2.224
L	14,3	.563
H	29	1.142
E	5,08	.2
B	21	.827
F	17	.669
N	12,7	.5
J	11,9	.469
RD	304,8	12
GC (Straight)	35	1.378
GC (Curve)	35	1.378

Chain material see page 12
Sprockets see page 211
Corner tracks see pages 280÷281
Sprocket positioning see page 300

1873T (Sideflexing - Tab - ¾" pitch)

BASE CHAIN MATERIAL	FLIGHT MATERIAL	REGINA REF.	CHAIN WIDTH W mm	CHAIN WIDTH W inches	SIDEFLEXING RADIUS R mm	SIDEFLEXING RADIUS R inches	WORKING LOAD (25°C/77°F) N	WORKING LOAD (25°C/77°F) lbs	CHAIN WEIGHT kg/m	CHAIN WEIGHT lbs/ft
CARBON STEEL	ACETAL RESIN (LW)	LW 1873T K 3 ¼	82,6	3.25	355,6	14	4500	1,013	2,10	1.41
		LW 1873T K 4 ½	114,3	4.50	355,6	14	4500	1,013	2,26	1.52
		LW 1873T K 6	152,4	6.00	457,2	18	4500	1,013	2,41	1.62
		LW 1873T K 7 ½	190,5	7.50	457,2	18	4500	1,013	2,56	1.72
		LW 1873T K 10	254,0	10.00	457,2	18	4500	1,013	2,78	1.87
		LW 1873T K 12	304,8	12.00	609,6	24	4500	1,013	3,00	2.02
	ABRASION RESISTANT RESIN* (AR)	AR 1873T K 3 ¼	82,6	3.25	355,6	14	4500	1,013	2,06	1.38
		AR 1873T K 4 ½	114,3	4.50	457,2	18	4500	1,013	2,19	1.47
STAINLESS STEEL (SS)	ACETAL RESIN (LW)	LW 1873T SS K 3 ¼	82,6	3.25	355,6	14	3500	788	2,08	1.40
		LW 1873T SS K 4 ½	114,3	4.50	355,6	14	3500	788	2,24	1.51
		LW 1873T SS K 6	152,4	6.00	457,2	18	3500	788	2,39	1.61
		LW 1873T SS K 7 ½	190,5	7.50	457,2	18	3500	788	2,53	1.70
		LW 1873T SS K 10	254,0	10.00	457,2	18	3500	788	2,75	1.85
		LW 1873T SS K 12	304,8	12.00	609,6	24	3500	788	2,97	2.00

* Due to different shrinkage of materials, actual width is larger than the standard.

Standard length: 3,048 m (10 feet)

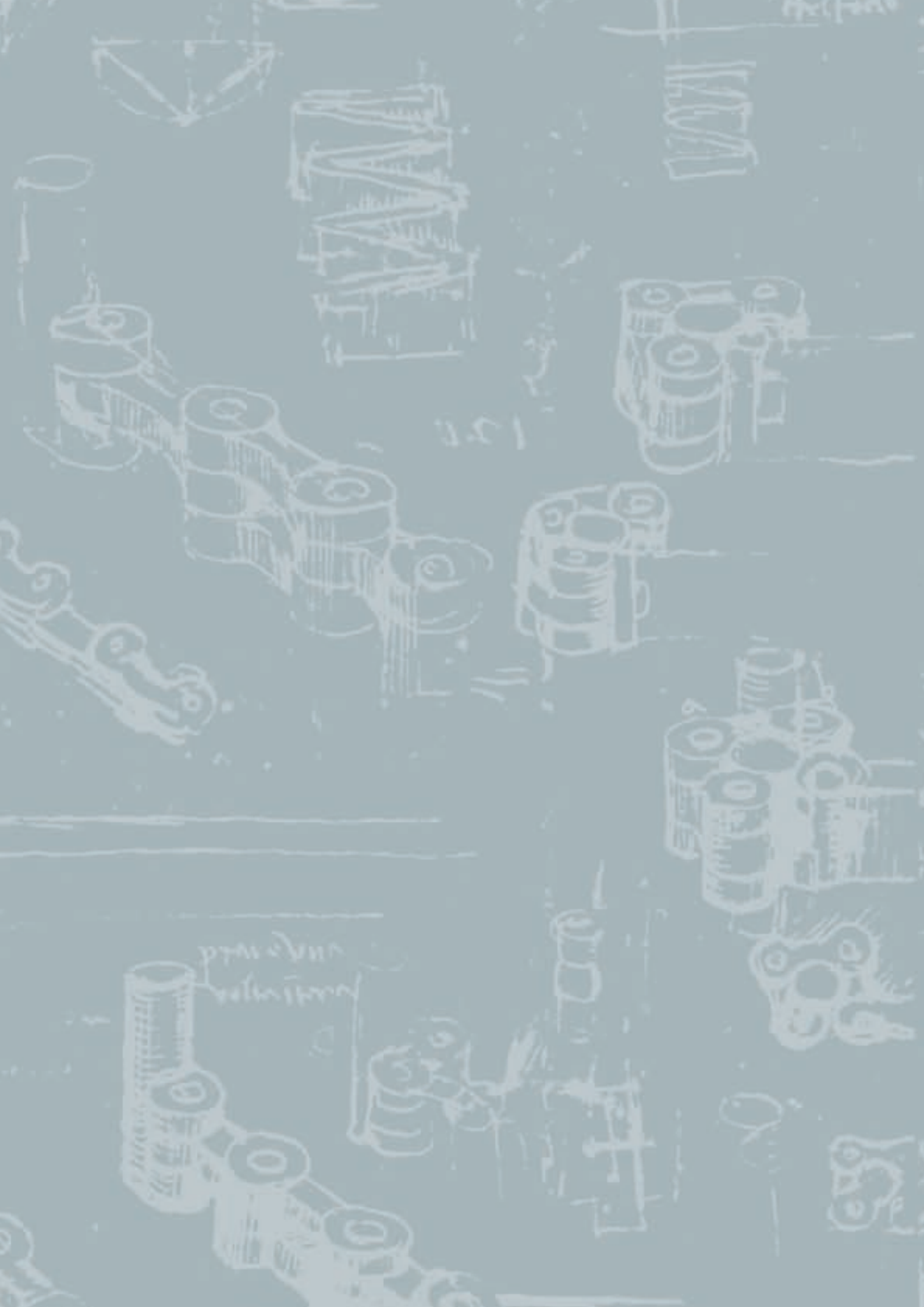

FliteTop®

Gripper Chains

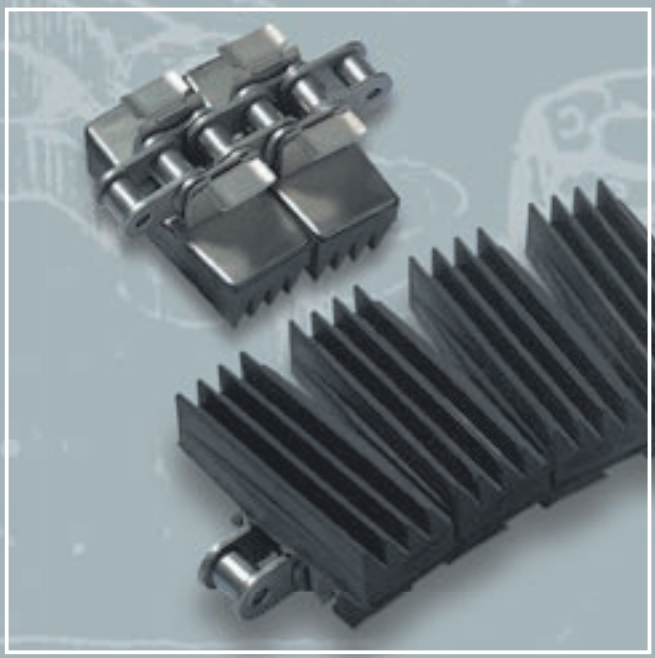

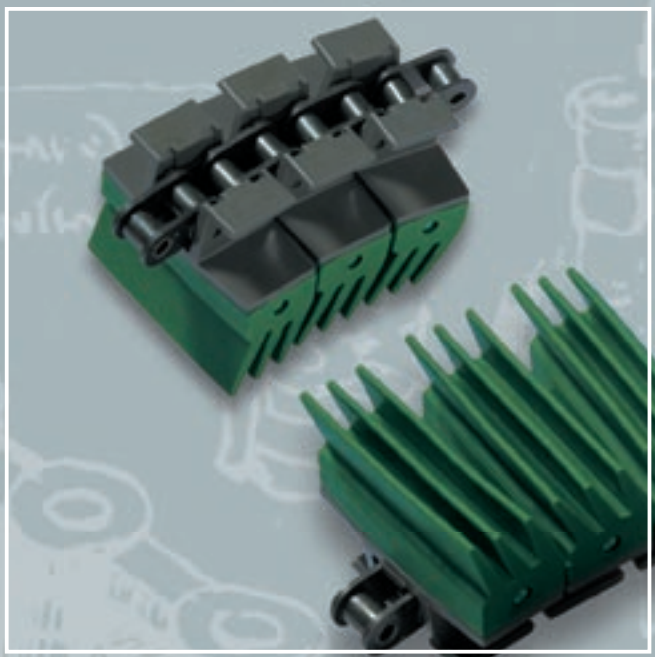

FliteTop®

GRIPPER CHAINS

APPLICATIONS:

- Elevators
- Lowerators
- Pass through conveyors
- Rinsers

RANGE:

Two Piece base roller chain:

Flight Materials

STEEL FLIGHTS
- Carbon Steel: Good wear resistance
- Stainless Steel: Good wear and corrosion resistance

PLASTIC FLIGHTS
- UP - DuPont™ Delrin® special acetal resin. It offers good wear resistance
- DK - DuPont™ Delrin® with DuPont™ Kevlar®.
  Excellent wear resistance, extremely reduced dusting. Particularly suitable for applications where good lubrication is not possible

Base roller chain materials (¾" pitches)

- Carbon Steel:
  excellent mechanical strength, excellent resistance to elongation
- Stainless Steel:
  good mechanical strength, corrosion resistance, good resistance to elongation

One Piece gripper chain (HG 878T Series):

Flight Materials

PLASTIC FLIGHTS
- LW - DuPont™ Delrin® special acetal resin. It offers good wear resistance

BENEFITS:

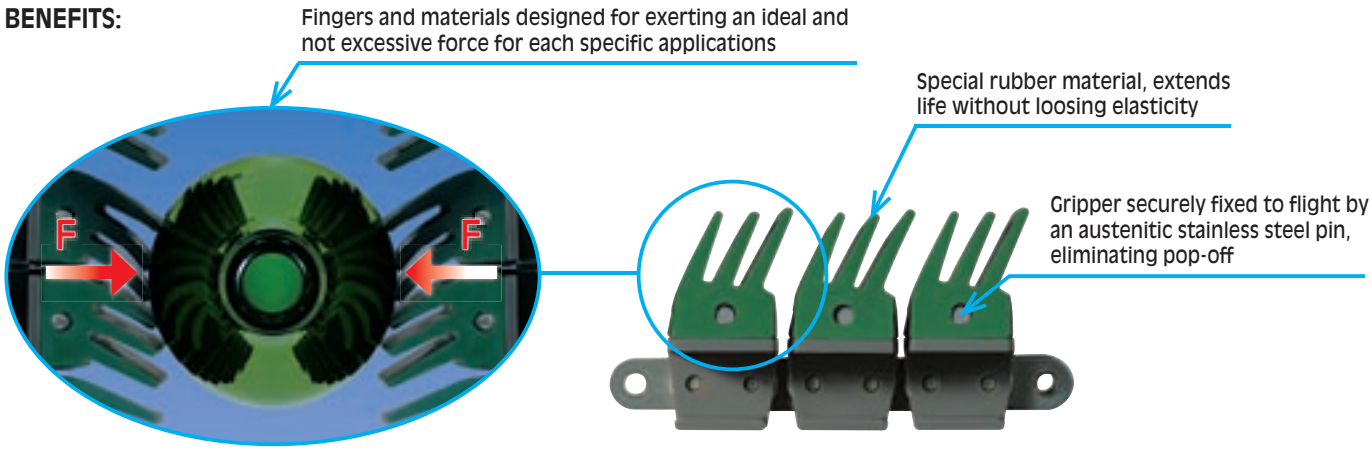

Note: Regina Stainless steel base chains have plates made in austenitic stainless steel and round parts (pins, bushings, rollers) made in martensitic steel thermically treated for a higher wear resistance

DuPont™ Delrin® and DuPont™ Kevlar® are registered trade marks of E.I. DuPont De Nemours and Associates

FliteTop®

GRIPPER CHAINS

PRODUCTION RANGE / APPLICATIONS

Steel Flights:

GV 1874T
has shorter fingers, which exert a higher force on the conveyed products.
Particularly suitable for conveying heavier containers and packaged products.

EV 1874T
has fingers which flex without increasing the force over product and conveyor.
Particularly suitable for conveying empty glass containers.

Plastic Flights:

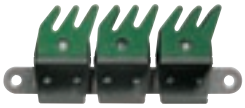

GW 1873T
is designed with shorter fingers, which exert a higher force on the conveyed products.
Particularly suitable for conveying heavier containers and packaged products.

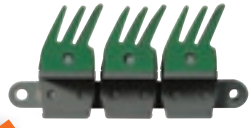

EW 1873T
has fingers which flex without increasing the force over product and conveyor.
Particularly suitable for conveying empty glass and Pet containers.

NEW

GD 1873T
offers a flat and more continuous contact surface between the rubber part and the conveyed product. Because of the particular cross section of the rubber pad, the force on the conveyed products remains controlled and uniform. Bidirectional.

NEW

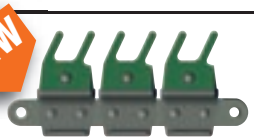

GU 1873T
guarantees a gentle handling of the conveyed product.
For special applications.

RUBBER STANDARD MATERIAL

Chains with Steel Flights (GV, EV)

	RUBBER MATERIAL	COLOUR	MIN TEMPERATURE		MAX TEMPERATURE WITHOUT LUBRICATION		MAX TEMPERATURE DAMP ENVIRONMENT		NON SUITABLE WITH	RESISTANT TO
			°C	°F	°C	°F	°C	°F		
STANDARD	NEOPRENE	BLACK	- 30	-22	+ 90	+194	+ 60	+140	OIL AND ACIDS	WEAK BASES
On Request	NITRILE	GREEN	- 10	+14	+ 110	+230	+ 80	+176	STRONG ACID AND BASES	OILS
On Request	EPDM	GREY	- 30	-22	+ 120	+248	+ 120	+248	OILS	ACID (WEAK)

Chains with Plastic Flights (GW, EW, GD, GU)

	RUBBER MATERIAL	COLOUR	MIN TEMPERATURE		MAX TEMPERATURE WITHOUT LUBRICATION		MAX TEMPERATURE DAMP ENVIRONMENT		NON SUITABLE WITH	RESISTANT TO
			°C	°F	°C	°F	°C	°F		
STANDARD	THERMOPLASTIC	GREEN	-40	- 40	+ 80	+176	+ 80	+176	OILS	WEAK ACIDS

* Please note that the maximum working temperature of the plastic flight is 65°C (+149°F)

FliteTop®

GRIPPER CHAIN STEEL FLIGHTS

GV 1874T SERIES - SHORT FINGERS

Reference	Standard Flight Materials S	SS
GV 1874T		

Base Chain Material: Carbon steel or Stainless steel.
Rubber Material: see page 85

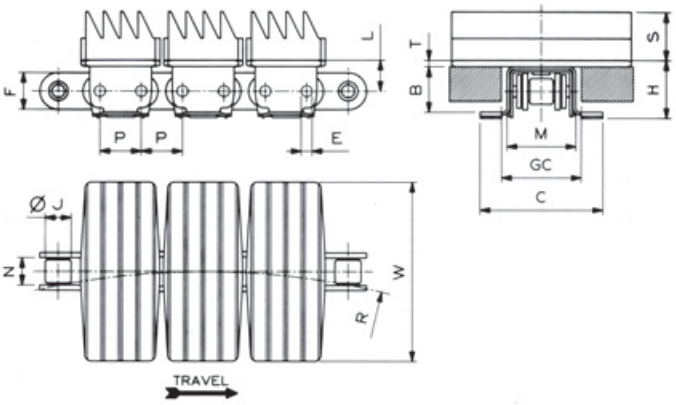

Dimension	mm	inches
P	19,05	.75
T	3	.118
M	31,8	1.252
C	56,5	2.224
L	14,3	.563
H	26,8	1.055
E	5,08	.2
B	21	.827
F	17	.669
N	12,7	.5
J	11,9	.469
S	22,4	.882
GC (Straight)	35	1.378
GC (Curve)	35	1.378

GV 1874T (Short Fingers)

Chain material see page 12

Sprockets see page 211

Corner tracks see pages 280÷281

Sprocket positioning see page 300

BASE CHAIN MATERIAL	FLIGHT MATERIAL	REGINA REF.	CHAIN WIDTH W		SIDEFLEXING RADIUS R		WORKING LOAD (25°C/77°F)		CHAIN WEIGHT	
			mm	inches	mm	inches	N	lbs	kg/m	lbs/ft
CARBON STEEL	CARBON STEEL	GV 1874T K 3 ¼	82,6	3.25	381,0	15	4500	1,013	5,70	3.83
		GV 1874T K 4 ½	114,3	4.50	381,0	15	4500	1,013	6,61	4.44
STAINLESS STEEL (SS)	STAINLESS STEEL (SS)	GV 1874T SS K 3 ¼	82,6	3.25	381,0	15	3500	788	5,40	3.63
		GV 1874T SS K 4 ½	114,3	4.50	381,0	15	3500	788	7,03	4.72

Standard length: 3,048 m (10 feet)

FliteTop®

GRIPPER CHAIN STEEL FLIGHTS

EV 1874T SERIES - LONG FINGERS

Reference	Standard Flight Materials S	SS
EV 1874T	■	■

Base Chain Material: Carbon steel or Stainless steel.
Rubber Material: see page 85

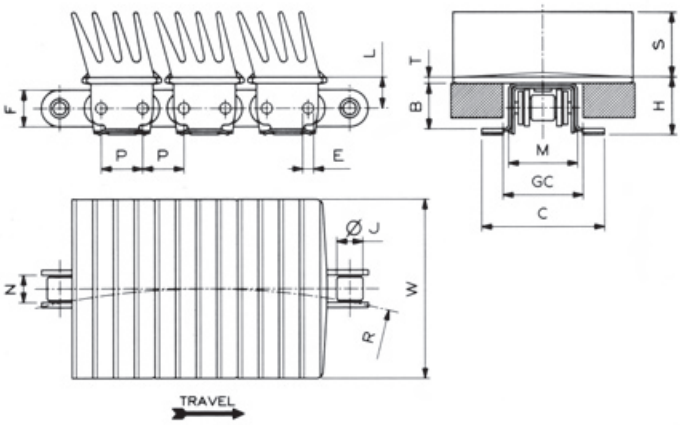

Dimension	mm	inches
P	19,05	.75
T	3	.118
M	31,8	1.252
C	56,5	2.224
L	14,3	.563
H	26,8	1.055
E	5,08	.2
B	21	.827
F	17	.669
N	12,7	.5
J	11,9	.469
S	30	1.181
GC (Straight)	35	1.378
GC (Curve)	35	1.378

EV 1874T (Long Fingers)

Chain material see page 12

Sprockets see page 211

Corner tracks see pages 280÷281

Sprocket positioning see page 300

BASE CHAIN MATERIAL	FLIGHT MATERIAL	REGINA REF.	CHAIN WIDTH W		SIDEFLEXING RADIUS R		WORKING LOAD (25°C/77°F)		CHAIN WEIGHT	
			mm	inches	mm	inches	N	lbs	kg/m	lbs/ft
CARBON STEEL	CARBON STEEL	**EV 1874T K 3 ¼**	82,6	3.25	381,0	15	4500	1,013	6,13	4.12
STAINLESS STEEL (SS)	STAINLESS STEEL (SS)	**EV 1874T SS K 3 ¼**	82,6	3.25	381,0	15	3500	788	5,85	3.93

Standard length: 3,048 m (10 feet)

FliteTop®

GRIPPER CHAIN THERMOPLASTIC FLIGHTS

GW 1873T SERIES - SHORT FINGERS

Reference	Standard Flight Materials UP	DK
GW 1873T		

Base Chain Material: Carbon steel or Stainless steel.
Rubber Material: Thermoplastic Rubber (see page 85).

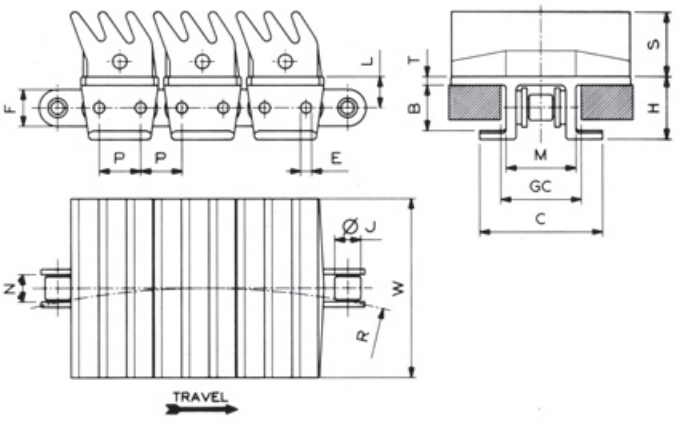

Dimension	mm	inches
P	19,05	.75
T	4	.157
M	32,1	1.264
C	56,5	2.224
L	14,3	.563
H	29	1.142
E	5,08	.2
B	21	.827
F	17	.669
N	12,7	.5
J	11,9	.469
S	30	1.181
GC (Straight)	35	1.378
GC (Curve)	35	1.378

GW 1873T (Short Fingers)

Chain material see page 12

Sprockets see page 211

Corner tracks see pages 280÷281

Sprocket positioning see page 300

BASE CHAIN MATERIAL	FLIGHT MATERIAL	REGINA REF.	CHAIN WIDTH W		SIDEFLEXING RADIUS R		WORKING LOAD (25°C/77°F)		CHAIN WEIGHT	
			mm	inches	mm	inches	N	lbs	kg/m	lbs/ft
CARBON STEEL	ULTRA PERFORMANCE ACETAL RESIN (UP)	GW 1873T UP K 3 ¼	82,6	3.25	355,6	14	4500	1,013	4,15	2.79
STAINLESS STEEL (SS)		GW 1873T UP SS K 3 ¼	82,6	3.25	355,6	14	3500	788	4,13	2.78
CARBON STEEL	REGINA DK	GW 1873T DK K 3 ¼	82,6	3.25	355,6	14	4500	1,013	4,15	2.79
STAINLESS STEEL (SS)		GW 1873T DK SS K 3 ¼	82,6	3.25	355,6	14	3500	788	4,13	2.78

Standard length: 3,048 m (10 feet)

FliteTop®

GRIPPER CHAIN THERMOPLASTIC FLIGHTS

EW 1873T SERIES - LONG FINGERS

Reference	Standard Flight Materials UP	DK
EW 1873T		

Base Chain Material: Carbon steel or Stainless steel.
Rubber Material: Thermoplastic Rubber (see page 85).

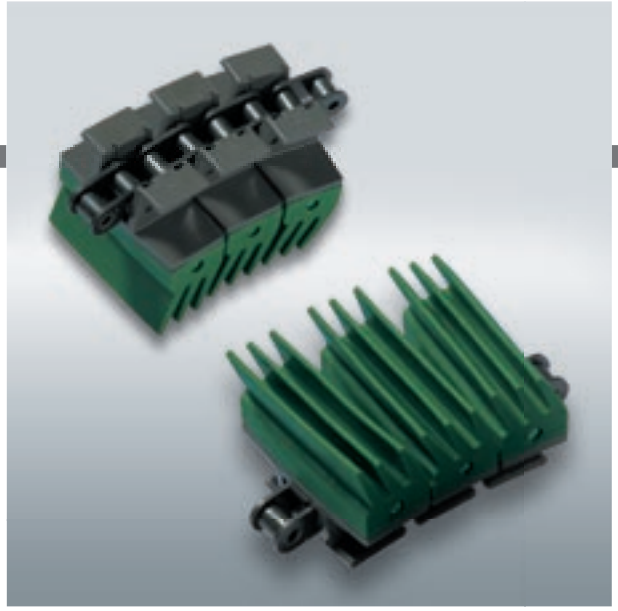

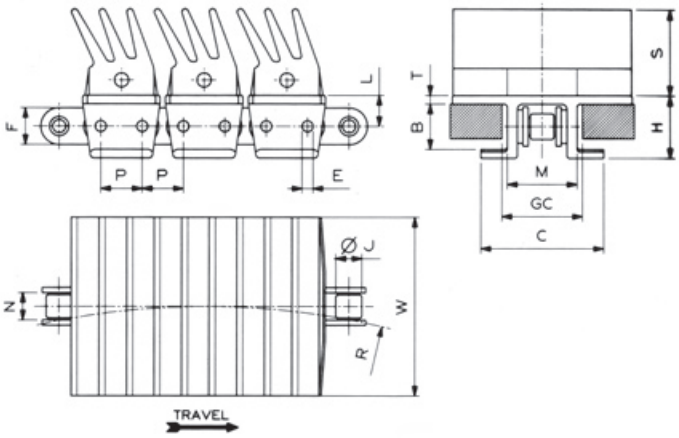

Dimension	mm	inches
P	19,05	.75
T	4	.157
M	32,1	1.264
C	56,5	2.224
L	14,3	.563
H	29	1.142
E	5,08	.2
B	21	.827
F	17	.669
N	12,7	.5
J	11,9	.469
S	40	1.575
GC (Straight)	35	1.378
GC (Curve)	35	1.378

EW 1873T (Long Fingers)

Chain material see page 12

Sprockets see page 211

Corner tracks see pages 280÷281

Sprocket positioning see page 300

BASE CHAIN MATERIAL	FLIGHT MATERIAL	REGINA REF.	CHAIN WIDTH W mm	CHAIN WIDTH W inches	SIDEFLEXING RADIUS R mm	SIDEFLEXING RADIUS R inches	WORKING LOAD (25°C/77°F) N	WORKING LOAD (25°C/77°F) lbs	CHAIN WEIGHT kg/m	CHAIN WEIGHT lbs/ft
CARBON STEEL	ULTRA PERFORMANCE ACETAL RESIN (UP)	EW 1873T UP K 3 ¼	82,6	3.25	355,6	14	4500	1,013	4,30	2.89
		NEW EW 1873T UP K 4 ½	114,3	4.50	355,6	14	4500	1,013	5,23	3.51
STAINLESS STEEL (SS)		EW 1873T UP SS K 3 ¼	82,6	3.25	355,6	14	3500	788	4,28	2.88
		NEW EW 1873T UP SS K 4 ½	114,3	4.50	355,6	14	3500	788	5,21	3.50
CARBON STEEL	REGINA DK	EW 1873T DK K 3 ¼	82,6	3.25	355,6	14	4500	1,013	4,30	2.89
		NEW EW 1873T DK K 4 ½	114,3	4.50	355,6	14	4500	1,013	5,23	3.51
STAINLESS STEEL (SS)		EW 1873T DK SS K 3 ¼	82,6	3.25	355,6	14	3500	788	4,28	2.88
		NEW EW 1873T DK SS K 4 ½	114,3	4.50	355,6	14	3500	788	5,21	3.50

Standard length: 3,048 m (10 feet)

FliteTop®

GRIPPER CHAIN THERMOPLASTIC FLIGHTS

GD 1873T SERIES - D-SHAPE

Reference	Standard Flight Materials UP	DK
GD 1873T		

Base Chain Material: Carbon steel or Stainless steel.
Rubber Material: Thermoplastic Rubber (see page 85).

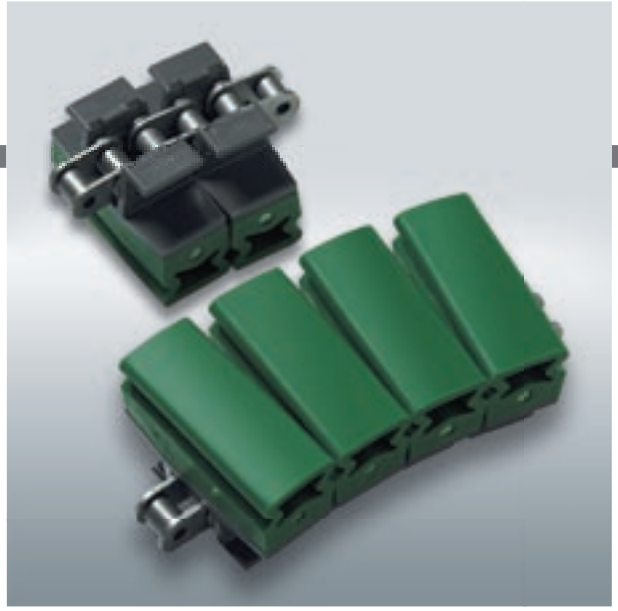

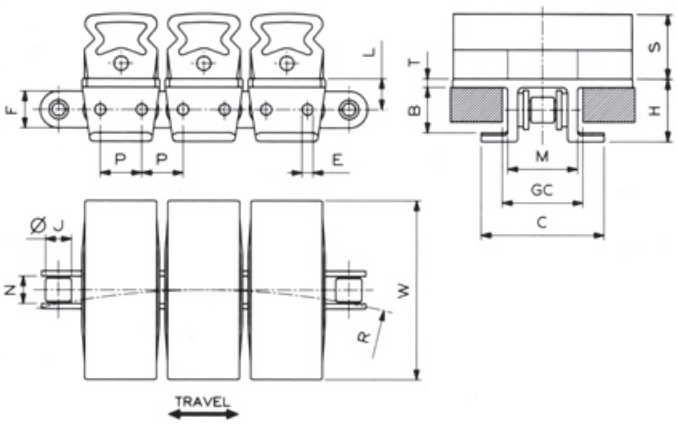

Dimension	mm	inches
P	19,05	.75
T	4	.157
M	32,1	1.264
C	56,5	2.224
L	14,3	.563
H	29	1.142
E	5,08	.2
B	21	.827
F	17	.669
N	12,7	.5
J	11,9	.469
S	30	1.181
GC (Straight)	35	1.378
GC (Curve)	35	1.378

NEW

GD 1873T (D - Shape)

Chain material see page 12

Sprockets see page 211

Corner tracks see pages 280÷281

Sprocket positioning see page 300

BASE CHAIN MATERIAL	FLIGHT MATERIAL	REGINA REF.	CHAIN WIDTH W		SIDEFLEXING RADIUS R		WORKING LOAD (25°C/77°F)		CHAIN WEIGHT	
			mm	inches	mm	inches	N	lbs	kg/m	lbs/ft
CARBON STEEL	ULTRA PERFORMANCE ACETAL RESIN (UP)	GD 1873T UP K 3 ¼	82,6	3.25	355,6	14	4500	1,013	4,03	2.71
STAINLESS STEEL (SS)		GD 1873T UP SS K 3 ¼	82,6	3.25	355,6	14	3500	788	4,00	2.69
CARBON STEEL	REGINA DK	GD 1873T DK K 3 ¼	82,6	3.25	355,6	14	4500	1,013	4,03	2.71
STAINLESS STEEL (SS)		GD 1873T DK SS K 3 ¼	82,6	3.25	355,6	14	3500	788	4,00	2.69

Standard length: 3,048 m (10 feet)

FliteTop®

GRIPPER CHAIN THERMOPLASTIC FLIGHTS

GU 1873T SERIES - U-SHAPE

Reference	Standard Flight Materials UP	DK
GU 1873T		

Base Chain Material: Carbon steel or Stainless steel.
Rubber Material: Thermoplastic Rubber (see page 85).

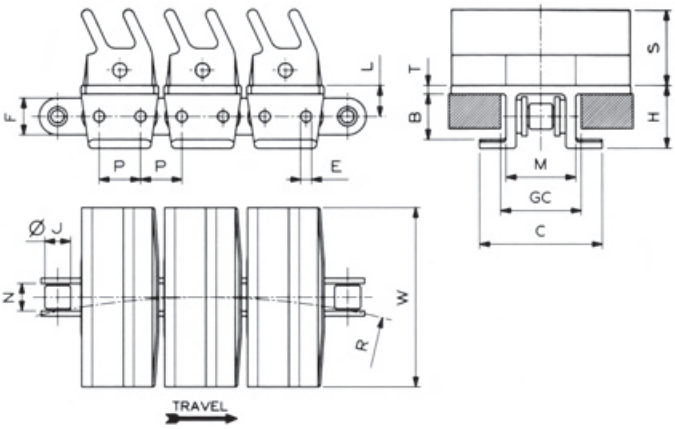

Dimension	mm	inches
P	19,05	.75
T	4	.157
M	32,1	1.264
C	56,5	2.224
L	14,3	.563
H	29	1.142
E	5,08	.2
B	21	.827
F	17	.669
N	12,7	.5
J	11,9	.469
S	35	1.378
GC (Straight)	35	1.378
GC (Curve)	35	1.378

NEW

GU 1873T (U - Shape)

Chain material see page 12

Sprockets see page 211

Corner tracks see pages 280÷281

Sprocket positioning see page 300

BASE CHAIN MATERIAL	FLIGHT MATERIAL	REGINA REF.	CHAIN WIDTH W		SIDEFLEXING RADIUS R		WORKING LOAD (25°C/77°F)		CHAIN WEIGHT	
			mm	inches	mm	inches	N	lbs	kg/m	lbs/ft
CARBON STEEL	ULTRA PERFORMANCE ACETAL RESIN (UP)	GU 1873T UP K 3 ¼	82,6	3.25	355,6	14	4500	1,013	4,12	2.77
		GU 1873T UP K 4 ½	114,3	4.50	355,6	14	4500	1,013	4,95	3.33
STAINLESS STEEL (SS)		GU 1873T UP SS K 3 ¼	82,6	3.25	355,6	14	3500	788	4,10	2.76
		GU 1873T UP SS K 4 ½	114,3	4.50	355,6	14	3500	788	4,93	3.31
CARBON STEEL	REGINA DK	GU 1873T DK K 3 ¼	82,6	3.25	355,6	14	4500	1,013	4,12	2.77
		GU 1873T DK K 4 ½	114,3	4.50	355,6	14	4500	1,013	4,95	3.33
STAINLESS STEEL (SS)		GU 1873T DK SS K 3 ¼	82,6	3.25	355,6	14	3500	788	4,10	2.76
		GU 1873T DK SS K 4 ½	114,3	4.50	355,6	14	3500	788	4,93	3.31

Standard length: 3,048 m (10 feet)

FliteTop®

GRIPPER CHAIN THERMOPLASTIC FLIGHTS

HG 878T SERIES - ONE PIECE CHAIN

- Reduced sideflexing radius (200 mm)
- Suitable for use with turning discs (Ref: CMA 09 878)
- Reinforced top plate thickness 4,8 mm

Reference	Standard Flight Materials LW
HG 878T	

Rubber Material: Thermoplastic rubber.
Pin Material: Cold rolled austenitic stainless steel.

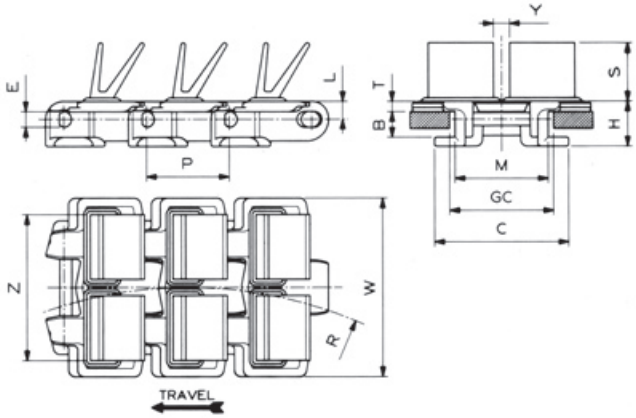

Dimension	mm	inches
P	38,1	1.5
M	42,9	1.689
C	61,8	2.433
L	8,3	.327
H	20,8	.819
E	7,05	.278
B	11,9	.469
S	27	1.063
Z	67,5	2.657
Y	7,5	.295
GC (Straight)	46	1.811
GC (Curve)	44,5	1.752

Chain material see page 12
Sprockets and Idler wheels see pages 202÷205
Sprocket positioning see page 299

HG 878T (One Piece - Tab - Reduced sideflexing radius)

MATERIAL	REGINA REF.	CHAIN WIDTH W		THICKNESS PLATE T		SIDEFLEXING RADIUS R		WORKING LOAD (25°C/77°F)		CHAIN WEIGHT	
		mm	inches	mm	inches	mm	inches	N	lbs	kg/m	lbs/ft
ACETAL RESIN (LW)	**HG 878T LW K 3 ¼**	82,6	3.25	4,8	0.189	200	7.874	2000	450	1,44	0.97

Standard length: 3,048 m (10 feet)

FliteTop®

LBP Chains

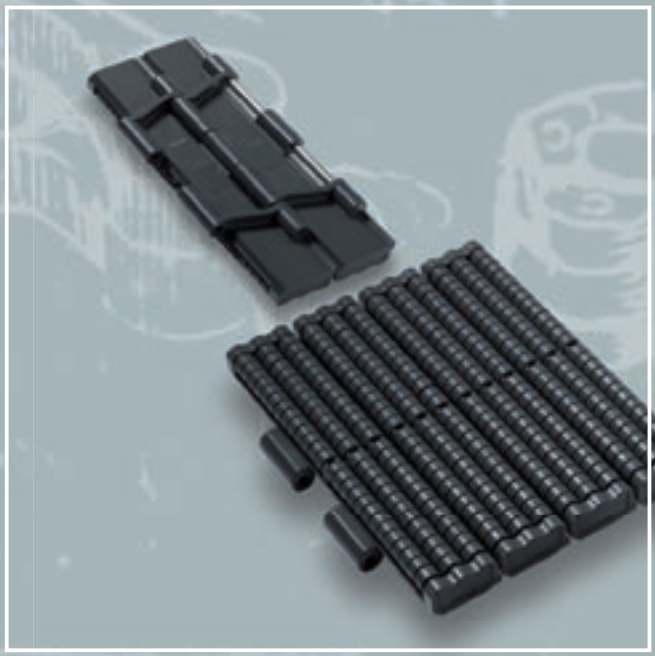

FliteTop®

LBP CHAINS

APPLICATIONS:

- Packaging lines (cartons, shrink packs)
- Paper and carboard boxes

BENEFITS:

- Flights made of DuPont™ **Delrin**® special dark grey acetal resin, for good wear resistance and mechanical strength.
- Rollers made of specifically designed thermoplastic resin, in order to achieve the lowest friction in combination with low noise.
- High ratio outside/inside roller diameter: better rotation capability, lower coefficient of friction

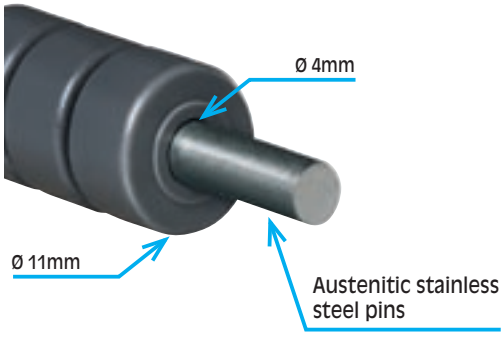

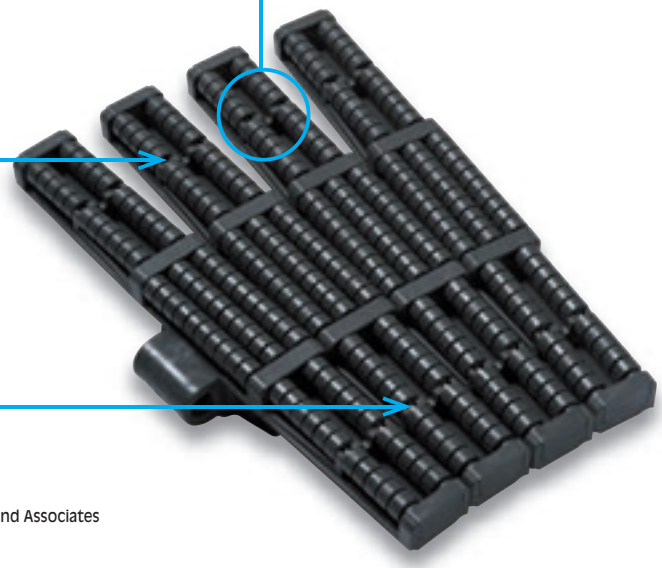

- On larger widths additional support pin are provided to maintain a flat carrying surface

DuPont™ **Delrin**® and DuPont™ **Kevlar**® are registered trade marks of E.I. DuPont De Nemours and Associates

FliteTop®

LOW BACK-LINE PRESSURE STRAIGHT RUNNING CHAIN

LBP 821 SERIES - DOUBLE HINGE

- Reinforced top plate thickness 4,8 mm

Reference	Standard Plate Materials DG
LBP 821	

Roller Material: Low friction and low noise acetal resin.
Pin Material: Cold rolled austenitic stainless steel.

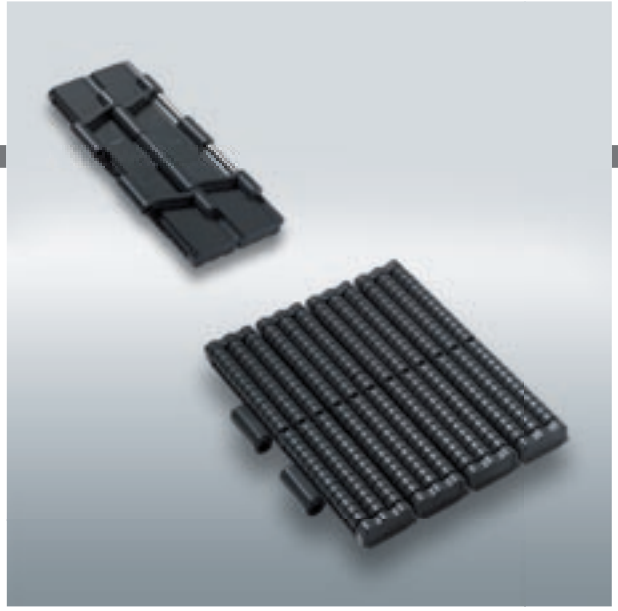

Other widths

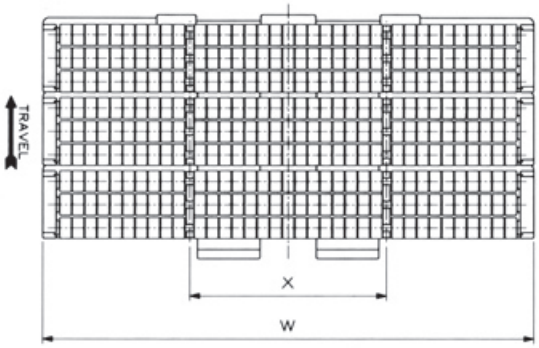

K 10 - K 12

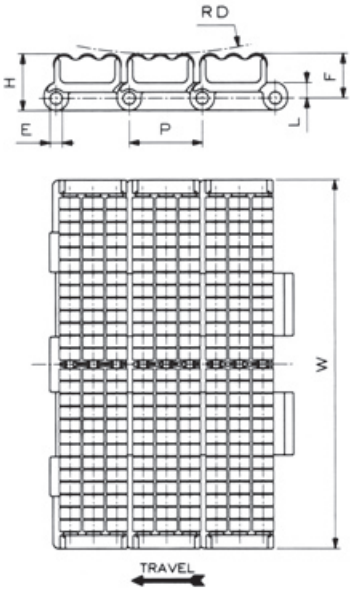

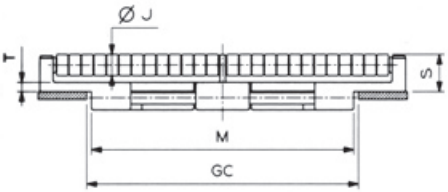

K 7½

Dimension	mm	inches
P	38,1	1.5
M	136,5	5.374
L	8	.315
H	28,8	1.134
E	6,35	.25
F	22,5	.886
S	19,3	.76
J	11	.433
x	101,6	4
RD	230	9.055
GC	140	5.512

LBP 821 (Straight Running - Double Hinge)

Chain material see page 12
Sprockets and Idler wheels see pages 200÷201
Sprocket positioning see page 299

BASE CHAIN MATERIAL	REGINA REF.	CHAIN WIDTH W		PLATE TICKNESS T		WORKING LOAD (25°C/77°F)		CHAIN WEIGHT	
		mm	inches	mm	inches	N	lbs	kg/m	lbs/ft
ACETAL RESIN (DG)	LBP 821 DG K 7 ½	190,5	7.50	4,8	0.189	2750	619	5,40	3.63
	LBP 821 DG K 10	254,0	10.00	4,8	0.189	2750	619	6,80	4.57
	LBP 821 DG K 12	304,8	12.00	4,8	0.189	2750	619	8,10	5.44

Standard length: 1,524 m (5 feet)

FliteTop®

LOW BACK-LINE PRESSURE SIDEFLEXING CHAIN

LBP 882T SERIES - TAB, HEAVY DUTY 57 mm HINGE

- Reinforced top plate thickness 4,8 mm

Reference	Standard Plate Materials DG
LBP 882T	

Roller Material: Low friction and low noise acetal resin.
Pin Material: Cold rolled austenitic stainless steel.

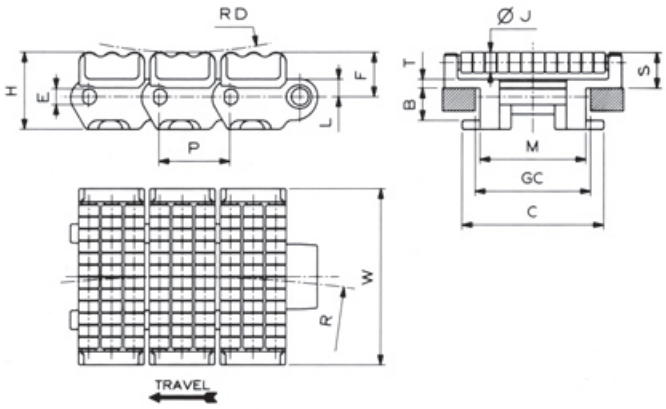

Dimension	mm	inches
P	38,1	1.5
M	57	2.244
C	76	2.992
L	9,5	.374
H	41,6	1.638
E	8,7	.343
F	24	.945
B	17	.669
S	19,3	.76
J	11	.433
RD	230	9.055
GC (Straight)	60	2.362
GC (Curve)	60	2.362

Chain material see page 12
Sprockets and Idler wheels see pages 206÷209
Corner tracks see pages 280÷281
Sprocket positioning see page 299

LBP 882T (Sideflexing - Tab - Heavy Duty 57 mm Hinge)

MATERIAL	REGINA REF.	CHAIN WIDTH W		PLATE THICKNESS T		SIDEFLEXING RADIUS R		WORKING LOAD (25°C/77°F)		CHAIN WEIGHT	
		mm	inches	mm	inches	mm	inches	N	lbs	kg/m	lbs/ft
ACETAL RESIN (DG)	**LBP 882T DG K 3 ¾**	95,3	3.75	4,8	0.189	667	26.26	2800	630	3,40	2.28

Standard length: 1,524 m (5 feet)

FliteTop®

LOW BACK-LINE PRESSURE SIDEFLEXING CHAIN

LBP 882T SERIES - TAB, HEAVY DUTY 57 mm HINGE

- Reinforced top plate thickness 4,8 mm

Reference	Standard Plate Materials DG
LBP 882T	

Roller Material: Low friction and low noise acetal resin.
Pin Material: Cold rolled austenitic stainless steel.

Other widths

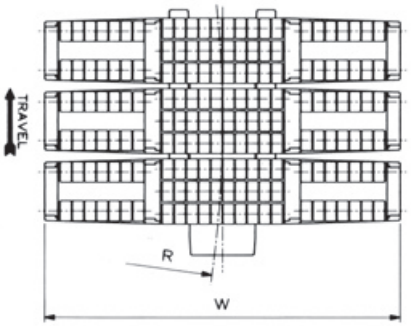

K 7½

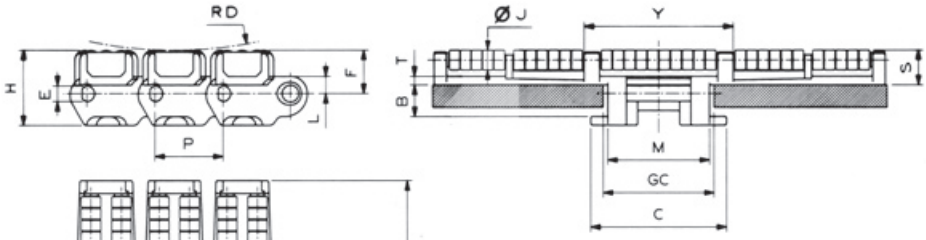

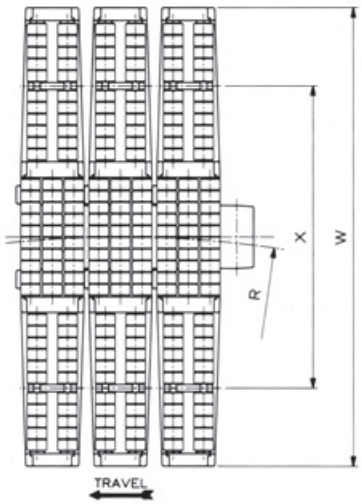

K 10 - K 12

Dimension	mm	inches
P	38,1	1.5
M	57	2.244
C	76	2.992
L	9,5	.374
H	41,6	1.638
E	8,7	.343
F	24	.945
B	17	.669
S	19,3	.76
J	11	.433
Y	83,5	3.287
RD	230	9.055
GC (Straight)	60	2.362
GC (Curve)	60	2.362

Chain material see page 12
Sprockets and Idler wheels see pages 206÷209
Corner tracks see pages 280÷281
Sprocket positioning see page 299

LBP 882T (Sideflexing - Tab - Heavy Duty 57 mm Hinge)

MATERIAL	REGINA REF.	CHAIN WIDTH W		PLATE THICKNESS T		DISTANCE BETWEEN AXLES X		SIDEFLEXING RADIUS R		WORKING LOAD (25°C/77°F)		CHAIN WEIGHT	
		mm	inches	mm	inches	mm	inches	mm	inches	N	lbs	kg/m	lbs/ft
ACETAL RESIN (DG)	LBP 882T DG K 7 ½	190,5	7.50	4,8	0.189	-	-	609,6	24	2800	630	5,10	3.43
	LBP 882T DG K 10	254,0	10.00	4,8	0.189	167,5	6.594	609,6	24	2800	630	6,10	4.10
	LBP 882T DG K 12	304,8	12.00	4,8	0.189	192,8	7.591	609,6	24	2800	630	6,70	4.50

Standard length: 1,524 m (5 feet)

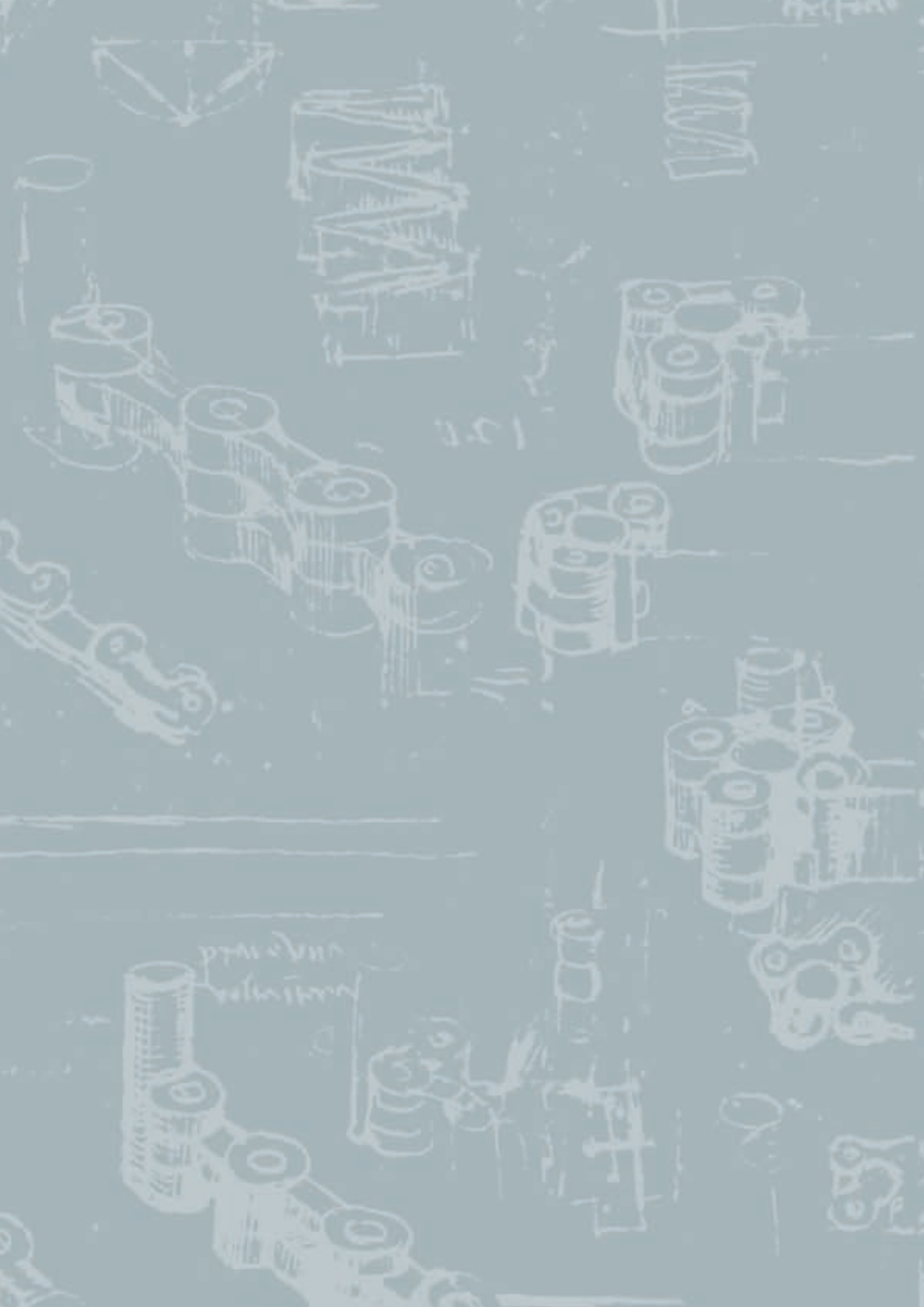

FliteTop®

Biplanar Chains

FliteTop®

BIPLANAR CHAINS

APPLICATIONS:

- Wax paperboard boxes (milk and fruit juice)
- Crate conveyors
- General purpose conveying with long distance center to center and many curves (use of turning discs)

CHAIN MATERIALS:

- **Delrin**® white acetal resin. It offers good wear resistance and mechanical strength
- LW - DuPont™ **Delrin**® special acetal resin. It offers very good wear resistance and mechanical strength
- DK - DuPont™ **Delrin**® with DuPont™ **Kevlar**®. Excellent wear resistance, extremely reduced coefficient of friction and dusting. Particularly suitable for applications where good lubrication is not possible

1700 chains can be used in combination with turning discs

Regina can supply, on request, loose flight with holes plus pins and pushers which the customer can assemble on the standard biplanar chains type 1702 and 1701TA (see page 104).

BENEFITS:

- A small sideflexing radius promotes a compact conveyor layout for the most economical use of floor space.

DK 1700 chain

- The coefficient of friction with carton bricks is extremely low even when lubrication is reduced or not possible, therefore the force on accumulated bricks is reduced.
  Pivot is made of a special reinforced polyamide resin, in order to reduce chain elongation

FliteTop®

SIDEFLEXING BIPLANAR CHAIN

1700 SERIES

Reference	Standard Materials White Acetal	LW	DK
1700			

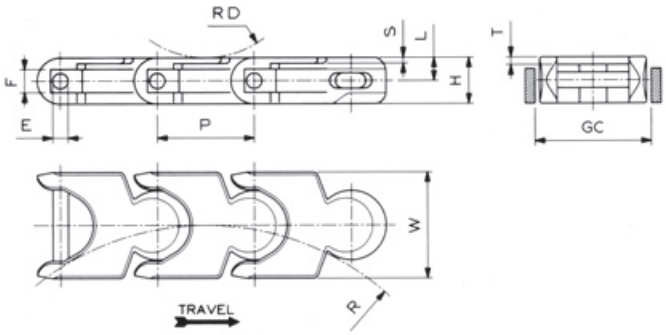

Dimension	mm	inches
P	50	1.969
L	12	.472
H	24	.945
E	8	.315
F	12	.472
S	3	.118
RD	50	1.969
GC (Straight)	58	2.283
GC (Curve)	60	2.283

1700 (Sideflexing)

Chain material see page 12

Sprockets see pages 212÷213

Turning disc see page 294

Sprocket positioning see page 301

LINK MATERIAL	PIN MATERIAL	REGINA REF.	CHAIN WIDTH W		PLATE THICKNESS T		SIDEFLEXING RADIUS R		WORKING LOAD (25°C/77°F)		CHAIN WEIGHT	
			mm	inches	mm	inches	mm	inches	N	lbs	kg/m	lbs/ft
WHITE ACETAL RESIN	ZINC STEEL	**B 1700**	55,0	2.17	4,0	0.157	140	5.512	3300	743	1,27	0.85
	STAINLESS STEEL	**C 1700**	55,0	2.17	4,0	0.157	140	5.512	3300	743	1,27	0.85
ACETAL RESIN (LW)	ZINC STEEL	**LW 1700**	55,0	2.17	4,0	0.157	140	5.512	2800	630	1,27	0.85
	STAINLESS STEEL	**A 1700**	55,0	2.17	4,0	0.157	140	5.512	2800	630	1,27	0.85
REGINA DK	STAINLESS STEEL	**DK 1700A**	55,0	2.17	4,0	0.157	140	5.512	3000	675	1,27	0.85

Standard length: 3,000 m (9.842 feet)

FliteTop®

SIDEFLEXING BIPLANAR CHAIN

1702 SERIES

Reference	Standard Materials White Acetal
1702	

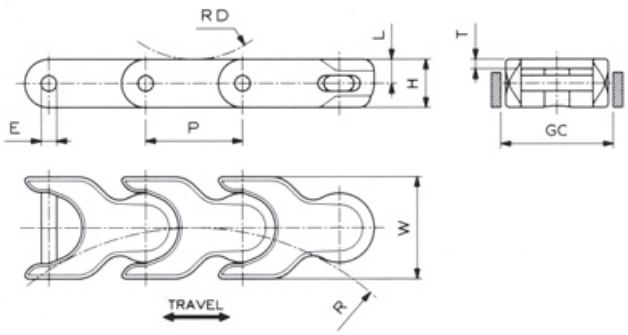

Dimension	mm	inches
P	50	1.969
L	12,5	.492
H	25	.984
E	8	.315
RD	50	1.969
GC (Straight)	56	2.205
GC (Curve)	56	2.205

Chain material see page 12
Sprockets see pages 212÷213
Sprocket positioning see page 301

1702 (Sideflexing)

LINK MATERIAL	PIN MATERIAL	REGINA REF.	CHAIN WIDTH W		PLATE THICKNESS T		SIDEFLEXING RADIUS R		WORKING LOAD (25°C/77°F)		CHAIN WEIGHT	
			mm	inches	mm	inches	mm	inches	N	lbs	kg/m	lbs/ft
WHITE ACETAL RESIN	STAINLESS STEEL	**1702A**	53,0	2.09	5,0	0.197	140	5.512	3300	743	1,37	0.92

Standard length: 3,000 m (9.842 feet)

FliteTop®

SIDEFLEXING BIPLANAR CHAIN

1701T series - TAB

Reference	Standard Materials White Acetal	LW	DK
1701T			on request

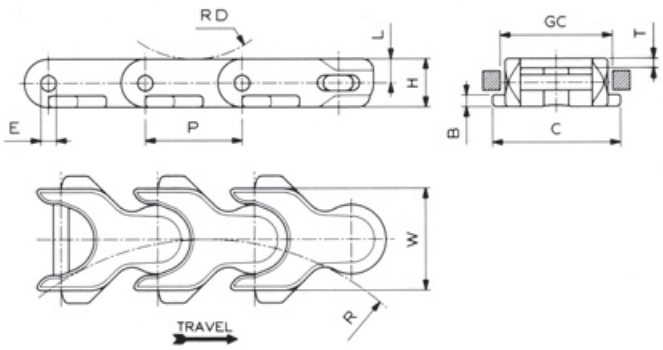

Dimension	mm	inches
P	50	1.969
C	66	2.598
L	12,5	.492
H	25	.984
E	8	.315
B	6	.236
RD	50	1.969
GC (Straight)	56	2.205
GC (Curve)	56	2.205

Chain material see page 12

Sprockets see pages 212÷213

Corner tracks see pages 280÷281

Sprocket positioning see page 301

1701T (Sideflexing - Tab)

LINK MATERIAL	PIN MATERIAL	REGINA REF.	CHAIN WIDTH W		PLATE THICKNESS T		SIDEFLEXING RADIUS R		WORKING LOAD (25°C/77°F)		CHAIN WEIGHT	
			mm	inches	mm	inches	mm	inches	N	lbs	kg/m	lbs/ft
WHITE ACETAL RESIN	STAINLESS STEEL	1701TA	53,0	2.09	5,0	0.197	140	5.512	3300	743	1,40	0.94
ACETAL RESIN (LW)		LW 1701TA	53,0	2.09	5,0	0.197	140	5.512	2800	630	1,40	0.94

Standard length: 3,000 m (9.842 feet)

BIPLANAR CHAINS TYPE 1702 AND 1701T WITH PUSHERS

Regina can supply, on request, loose flights with holes plus pins and pushers which the customer can assemble on the standard biplanar chains type 1702 and 1701T

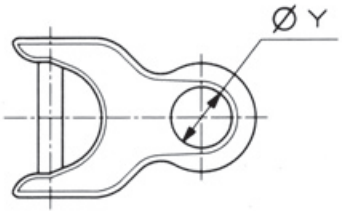

Ref: 136/1702

Dimension	mm	inches
Y	20,2	.795

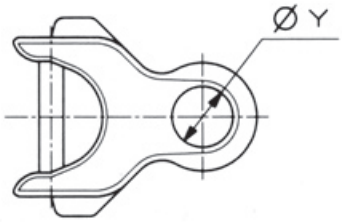

Ref: 136/1701T

Two types of pushers are available:

TYPE "S" PUSHERS:
With possibility of product accumulation.
This type of pusher has a rounded shape which allows some products accumulation.

TYPE "L" PUSHERS:
With no possibility of product accumulation.
This type of pusher has a height that prevents any products accumulation.

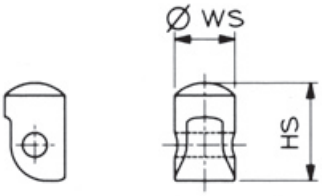

Ref: 232/1700

Dimension	mm	inches
WS	20	.787
HS	32,5	1.28
WL	12	.472
HL	42,5	1.673

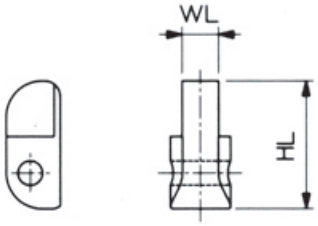

Ref: 233/1700

Example of 1702 chain with pushers:

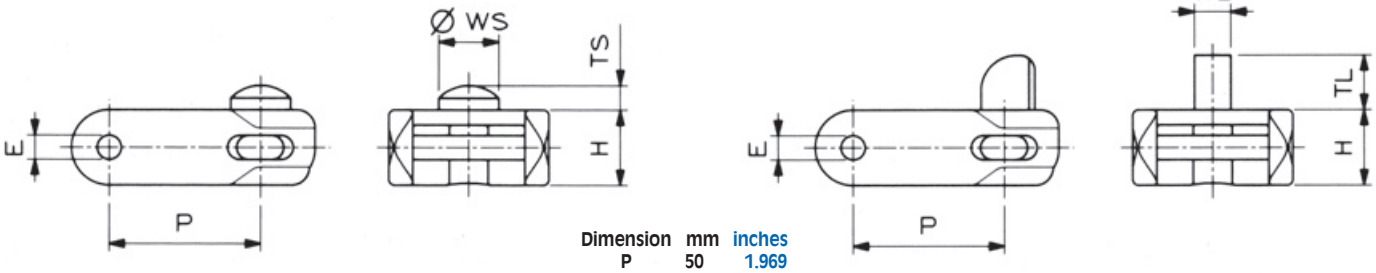

Dimension	mm	inches
P	50	1.969
H	25	.984
E	8	.315
WS	20	.787
TS	8	.315
WL	12	.472
TL	18	.709

FliteTop®

Case Conveyor Chains

FliteTop®

CASE CONVEYOR CHAINS

P 600-O SERIES - OPEN SURFACE

Reference	Standard Materials White Acetal
P 600-O	

Pin Material: Cold rolled stainless steel.

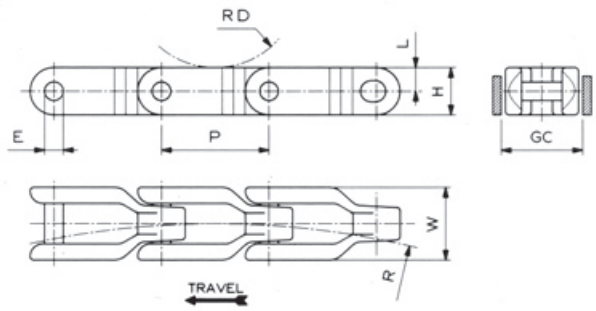

Dimension	mm	inches
P	63,5	2.5
L	14	.551
E	11	.433
RD	50	1.969
GC (Straight)	46	1.811
GC (Curve)	46	1.811

Chain material see page 12
Sprockets see pages 214÷215
Sprocket positioning see page 301

P 600-O (Sideflexing - Open Surface)

LINK MATERIAL	REGINA REF.	CHAIN WIDTH W		CHAIN HEIGHT H		SIDEFLEXING RADIUS R		WORKING LOAD (25°C/77°F)		CHAIN WEIGHT	
		mm	inches	mm	inches	mm	inches	N	lbs	kg/m	lbs/ft
WHITE ACETAL RESIN	**P 600-O**	43,0	1.69	28,0	1.102	508	20	2000	450	1,30	0.87

Standard length: 3,048 m (10 feet)

FliteTop®

CASE CONVEYOR CHAINS

P 600T-O SERIES - TAB, OPEN SURFACE

Reference	Standard Materials White Acetal
P 600T-O	

Pin Material: Cold rolled stainless steel.

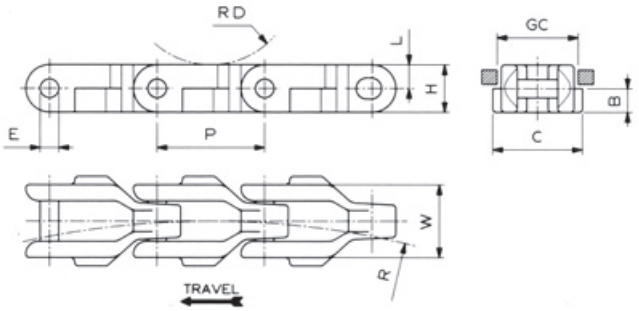

Dimension	mm	inches
P	63,5	2.5
C	53	2.087
L	14	.551
E	11	.433
B	14	.551
RD	50	1.969
GC (Straight)	46	1.811
GC (Curve)	46	1.811

Chain material see page 12
Sprockets see pages 214÷215
Sprocket positioning see page 301

P 600T-O (Sideflexing - Tab - Open Surface)

LINK MATERIAL	REGINA REF.	CHAIN WIDTH W		CHAIN HEIGHT H		SIDEFLEXING RADIUS R		WORKING LOAD (25°C/77°F)		CHAIN WEIGHT	
		mm	inches	mm	inches	mm	inches	N	lbs	kg/m	lbs/ft
WHITE ACETAL RESIN	**P 600T-O**	43,0	1.69	28,0	1.102	508	20	2000	450	1,35	0.91

Standard length: 3,048 m (10 feet)

FliteTop®

CASE CONVEYOR CHAINS

P 2600-C SERIES - CLOSED SURFACE

Reference	Standard Materials White Acetal
P 2600-C	

Pin Material: Cold rolled stainless steel.

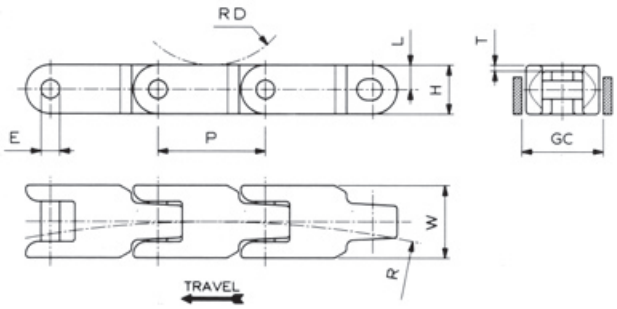

Dimension	mm	inches
P	63,5	2.5
T	3,5	.138
L	14,5	.571
E	11	.433
RD	50	1.969
GC (Straight)	46	1.811
GC (Curve)	46	1.811

Chain material see page 12
Sprockets see pages 214÷215
Sprocket positioning see page 301

P 2600-C (Sideflexing - Closed Surface)

LINK MATERIAL	REGINA REF.	CHAIN WIDTH W		CHAIN HEIGHT H		SIDEFLEXING RADIUS R		WORKING LOAD (25°C/77°F)		CHAIN WEIGHT	
		mm	inches	mm	inches	mm	inches	N	lbs	kg/m	lbs/ft
WHITE ACETAL RESIN	**P 2600-C**	43,0	1.69	29,0	1.142	609,6	24	2000	450	1,39	0.93

Standard length: 3,048 m (10 feet)

FliteTop®

CASE CONVEYOR CHAINS

P 2600T-C SERIES - TAB, CLOSED SURFACE

Reference	Standard Materials White Acetal
P 2600T-C	

Pin Material: Cold rolled stainless steel.

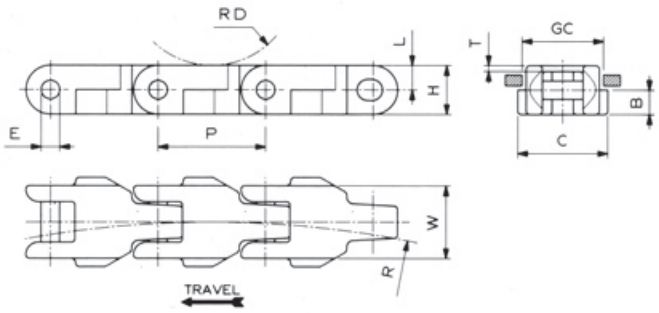

Dimension	mm	inches
P	63,5	2.5
T	3,5	.138
C	53	2.087
L	14,5	.571
E	11	.433
B	14,5	.571
RD	50	1.969
GC (Straight)	46	1.811
GC (Curve)	46	1.811

Chain material see page 12
Sprockets see pages 214÷215
Sprocket positioning see page 301

P 2600T-C (Sideflexing - Tab - Closed Surface)

LINK MATERIAL	REGINA REF.	CHAIN WIDTH W		CHAIN HEIGHT H		SIDEFLEXING RADIUS R		WORKING LOAD (25°C/77°F)		CHAIN WEIGHT	
		mm	inches	mm	inches	mm	inches	N	lbs	kg/m	lbs/ft
WHITE ACETAL RESIN	**P 2600T-C**	43,0	1.69	29,0	1.142	609,6	24	2000	450	1,43	0.96

Standard length: 3,048 m (10 feet)